QUADREL
LABELING SYSTEMS

Operating & Maintenance
Manual
For

# HUVEPHARMA, INC

# ECONOLINE FRONT/BACK/WRAP
## Automatic Labeling System

Labeler Model #: Q120 STEPPER
Serial #: 84237-100

QUADREL LABELING SYSTEMS
7670 Jenther Drive
Mentor, Ohio 44060
440.602.4700

customerservice@quadrel.com
parts@quadrel.com

# TERMS AND CONDITIONS OF SALE
# QUADREL, INC
# D/B/A Quadrel Labeling Systems Hereinafter Referred to as Quadrel

**PERFORMANCE GUARANTEE:**

If the surface of the product to be labeled is free from contamination so as to ensure proper label adhesion, the labels are manufactured in accordance with label specifications provided and the equipment is operated and maintained in accordance with the instructions contained in the Quadrel manual (two copies of the manual will be supplied by Quadrel with the labeling system; one printed copy, and one electronic copy). Quadrel guarantees the EQUIPMENT to perform after installation as stated.

1. Provided a sufficient amount of products are presented to the labeling system.
2. Dimensional inconsistency from one like product to be labeled to the other may result in additional label placement inaccuracy in direct relationship to the product inconsistency.
3. Slitting inconsistency within a given roll of labels or from one like roll to another may result in additional label placement inaccuracy in direct relationship to the slitting inconsistency.
4. If the Quadrel labeling system proposed herein does not include physical control of the product during label application, additional placement inaccuracy can occur in direct relationship to the product control inconsistency.
5. Label Placement Accuracy: Within Sigma 2 (approximately 95.5%) to be normal.

In the event of the failure if the Quadrel system to meet customer's specifications, as quoted by Quadrel or subsequently agreed to by Quadrel. Quadrel upon written notice from buyer shall, at its option, repair the system, or refund the purchase price upon return of the system. The warranty provided in this article and the obligations and liabilities of Quadrel thereunder are exclusive and in lieu of, and buyer hereby waived, other remedies warranties, guarantees or liabilities, express or implied arising by law or otherwise (including without limitation, any obligations of Quadrel with respect to fitness for a particular purpose, merchantability, specific performance, incidental and consequential damages) whether or not occasioned by Quadrel's negligence. This warranty should not be extended altered or varied except by written instrument signed by Quadrel and buyer.

<u>EXCLUSIVE TERMS OF SALE</u>: The proposal attached hereto or to which these Terms and Conditions of Sale apply (the "Proposal"), together with these Terms and Conditions of sale (collectively, the "Sale Agreement"), constitutes the complete and exclusive statement of the agreement between Quadrel and the purchaser specified in the Proposal ("Purchaser") concerning the equipment and other goods specified in the Proposal (collectively, the "Equipment"), as well as any and all services specified in the Proposal (collectively, the "Services"), and supersedes all prior contemporaneous agreements, representations and/or communications, either oral or written, between Quadrel and Purchaser or any representative such as parties with the respect to the subject matter of the Sale Agreement. No change to the Sale Agreement or waiver of any provision thereof will be binding on Quadrel unless made in writing and signed off by and authorized officer of Quadrel. Acceptance of the Equipment, in whole or part, or other express or implied assent by Purchaser to the terms hereof shall constitute Purchaser's agreement to the terms of the Sale Agreement. Acceptance of any purchase order or other document of Purchaser by Quadrel is expressly made conditional on the Purchaser's assent to the Sale Agreement. ANY ATTEMPTED MEMORIALIZATION OF THIS SALE BY A PURCHASE ORDER OR OTHER DOCUMENT CONTAINING TERMAND CONDITIONS INCOSISTANT WITH OR IN ADDITION TO THE CONDITIONS CONTAINED IN THE SALE AGREEMENT SHALL NOT BE BINDING UPON QUADREL AND QUADREL HEREBY EXPRESSLY OBJECTS TO AND REJECTS THE SAME.

**GENERAL WARRANTY (EXCLUDES TABLETOP LABELERS)**

| Time from date of shipment | Covered Expenses |
|---|---|
| Up to 90 Days | All Parts , service time, living and travel expenses |
| UP to 12 Months | All parts |

**THE WARRANTIES PROVIDED ABOVE ARE IN LIEU OF ANY AND ALL OTHER WARRANTIES AND LIABILITIES, EXPRESSED OR IMPLIED, INCLUDING BUT NOT LIMITED TO ANY WARRANTIES OF MERCHANTABILITY OR FITNESS FOR ANY PARTICULAR PURPOSE.** NO OTHER WARRANTIES ARE OFFERED BY QUADREL WITH RESPECT TO THE EQUIPMENT OR SERVICES AND QUADREL HAS NOT AUTHORIZED ANY EMPLOYEE OR AGENT TO OFFER ANY WARRANTIES EXCEPT THOSE PROVIDED ABOVE. PURCHASER AND QUADREL EXPRESSLY AGREE THAT THE WARRANTIES PROVIDED ABOVE SHALL SERVE AS PURCHASER'S SOLE AND EXCLUSIVE REMEDY WITH RESPECT TO THE EQUIPMENT AND SERVICES.

PURCHASER REEQUIRMENTS. Purchaser must provide Quadrel descriptions and specifications of all labels and items to be labeled, including, without limitation, label material, product and label dimensions, and any other items required by Quadrel. Further, purchaser shall furnish Quadrel one (1) production size roll of each label and 100 samples of each item to be labeled for testing purposes. **Quadrel shall have no liability (whether under its Limited One-Year Warranty or otherwise) for labeling performance on labels or items to be labeled:**

**(a) Which were not specified or sufficiently described in the Proposal: or**

**(b) With respect to which Purchaser fails to provide Quadrel the samples specified herein, even if such labels or items to be labeled were specified in the Proposal. Further, Quadrel shall have no liability for delays caused by Purchaser's failure to furnish samples as specified herein.**

<u>LIMITATION OF WARRANTIES</u>. Quadrel shall have no obligation to honor its warranties and shall have no liability with respect to defective Equipment if:

(a) The Equipment has been modified, altered, damaged, abused or used for any other than those purposes intended by Quadrel.

(b) The Equipment has been changed without prior written consent from Quadrel.

(c) The equipment has not been operated and maintained in accordance with generally accepted commercial practices for similar equipment and Quadrel's specifications and instructions, as published in the Quadrel manual.

(d) The surface if the product to be labeled is not clean and free of contamination, including, but not limited to, mold release agents, condensation, dirt and oil.

(e) Labels are not manufactured in accordance with label specifications provided by Quadrel, or are not from defects such as cracked edges, deep die strikes, *etc*.

(f) Labels and items to be labeled are not set forth in the Proposal.

(g) Samples of all products and labels were not provided to Quadrel for testing prior to Equipment shipment as required under "Purchaser Requirements" outlined above.

(h) There is dimensional inconsistency from one like roll of labels to another.

(i) *The Equipment does NOT include physical control of the product.*

<u>LIMITATION OF REMEDIES</u>. All warranty claims shall be subject to review and approval by Quadrel. Quadrel's obligation to honor warranties is in all cases limited to, at Quadrel's sole option:

(a) Repair of defective Equipment or components: or

(b) Providing a cash refund or credit, after Purchaser has returned Equipment to Quadrel.

Where warranty service is to be provided at the Quadrel facility, Purchaser shall return Equipment claimed to be defective to Quadrel, freight prepaid, for review. No Equipment shall be returned to Quadrel, whether for inspection, repair, refund, or any other reason, without prior return authorization from Quadrel. Quadrel may charge Purchaser cost resulting from testing, handling and disposition of Equipment claimed to be defective by Purchaser which is found by Quadrel to conform to Quadrel's warranties.

<u>LIMITIATION OF LIABILITY</u>. QUADREL SHALL HAVE NO LIABILITY FOR ANY CONSEQUENTIAL, INCIDENTAL, PUNITIVE OR SPECIAL DAMAGES BY REASON OF ANY ACT OR OMISSION OR ARISING OUT OF OR IN CONNECTION WITH THE (a) EQUIPMENT OR ITS SALE, DELIVERY, INSTALLATION, MAINTENANCE, OPERATION, OR PERFORMANCE, OR (b) SERVICES. IN NO EVENT SHALL QUADREL'S LIABILITY EXCEED THE PRICE OF THE EQUIPMENT (OR THE PRICE OF THE SERVICES IF A CLAIM IS MADE WITH RESPECT TO THE SERVICES) WITH RESPECT TO WHICH A CLAIM IS MADE REGARDLESS OF WHETHER SUCH CLAIM IS BROUGHT

AT LAS OR IN EQUITY AND REGARDLESS OF WHETHER SUCH CLAIM IS BROUGHT UNDER CONTRACT, BREACH OF WARRANTY, TORT OR ANY OTHER THEORY OF LAW OR EQUITY.

**ORDERS:**
Orders entered, verbal or written, cannot be cancelled except upon terms that will compensate Quadrel against any and all claims

**START-UP SERVICE:**
Quadrel will provide, at standard installation rates, the number of normal eight-hour working days for the Quadrel Field Service Technician to start the EQUIPMENT and to train PURCHASER'S operating and maintenance personnel. EQUIPMENT is not uncrated and emplaced in desired location by PURCHSER prior to arrival of Quadrel Field Service Technician, or if the EQUIPMENT cannot be made operational due to non-availability of products, labels, appropriate utilities and/or related production equipment, PURCHASER shall pay Quadrel for additional service time required including travel expenses, if applicable, in accordance with Quadrel's Field Service rates. It is PURCHASER's obligation to schedule the start-up service at a time when PURCHSER'S engineering, maintenance and selected production personnel are available.

**SERVICE AFTER INSTALLATION:**
Quadrel Field Service Technicians are available to customers who do not maintain their own service departments. This can be handles on a per visit basis. Field Service rates are available on request.

**PAYMENT TERMS:**
Payment terms are as follows: 50% of purchase with purchase order, 40% of purchase at the time of shipment, 10% of purchase (plus freight charges) due net 30 days. If shipment is delayed beyond 30 days after the EQUIPMENT has been made ready for shipment, and the delay is caused directly or indirectly by the PURCHASER, then the total of the unpaid balance, at option of Quadrel, may become immediately due and payable upon written notice. Payments not paid when due shall thereafter bear monthly service charges at the rate of 1.5% per month on the unpaid balance until paid. If, in Quadrel's opinion, PURCHASER'S financial condition does not justify continuance of production or shipment on the terms of payment specified above, Quadrel may require payments in advance.

FINANCIAL IMPAIRMENT. Quadrel may, at its option, suspend performance if in its opinion the credit of the Purchaser becomes impaired until such time as Quadrel has received full payment, including any general price increases or surcharges, is satisfactory security for deliveries made and is satisfied as to Purchasers credit for future deliveries. Quadrel reserves the right to cancel Purchaser's credit at any time for any reason. In addition, Quadrel reserves the right by written notice to cancel any order or require full or partial payment or adequate assurance of performance from Purchaser without Liability to Quadrel in the event of:

(a) Purchaser's insolvency
(b) Filing of a voluntary petition in bankruptcy by Purchaser
(c) Filing of an involuntary petition in bankruptcy against Purchaser
(d) Appointment of a receiver or trustee for Purchaser
(e) Execution by Purchaser of an assignment for the benefit of creditors

**TAXES:**
The amount of any present or future federal, state, local or other taxes applicable to the sale of EQUIPMENT shall be added to the price and paid by PURCHASER unless PURCHASER provides a valid exemption certificate acceptable to Quadrel and the appropriate tax authority.

GOVERNING LAW AND JURISDICTION. The sale agreement shall be governed and construed in accordance with the domestic laws of the State of Ohio without giving effect to any choice or conflict of law provision or rule that would cause the application of the laws of any jurisdiction other than the State of Ohio. Any legal action, suit or proceeding relating to the Sale Agreement shall be heard and determined exclusively in the United States District Court for the Northern District of Ohio or the Court of Common Pleas of Lake County, Ohio, and each party irrevocably submits to the jurisdiction of either such courts and waives any objection which such party may have to the laying of venue of any such legal action, suit or proceeding in any such court.

The Sale Agreement shall not be governed by the United Nations Convention on the International Sales of Goods. No actions arising out of the sale of Equipment or Services may be brought by either party more than one (1) year after shipment.

**RETURNS:**
EQUIPMENT sold by Quadrel is returnable only in accordance with the provisions hereof. Before returning of any EQUIPMENT or items thereof, PURCHASER must obtain Quadrel's written return authorization and instructions.

**FORCE MAJEURE:**
Quadrel shall not be liable for any loss, damage, delay, changes in shipment schedules or failure to deliver due to act of God, accidents, fires, strikes, riots, civil commotion, insurrection, war, the elements, embargoes, failure of carriers, inability to obtain electricity or other type of energy, transportation facilities, raw material, equipment or any problem or any similar or different contingency beyond its reasonable control which would make performance commercially impractical whether or not the contingency is of the same class as those above. Quadrel shall in no event be liable for any consequential damages.

**TITLE AND RISK OF LOSS:**
Title and risk of loss to EQUIPMENT shall pass to PURCHASER upon delivery by Quadrel to a common carrier, regardless of the freight terms stated or method of payment for transportation charges. Quadrel reserves the right to specify routing of shipments.

**ENTIRE AGREEMENT:**
This agreement embodies the entire agreement and understanding between the parties, is intended as complete and exclusive statement of terms of the agreement between the parties and supersedes any prior agreements or understandings between the parties relating to the subject matter hereof. PURCHASER acknowledges that Quadrel has not made any representations to PURCHASER other than those which are contained herein. Except as provided in this agreement, no change in or addition to the terms contained herein shall be valid as between the parties unless set forth in writing which is signed by an authorized representative of both parties and which specifically states that it constitutes an amendment to this agreement.

The parties may use their normal commercial forms in connection herewith: however, any such forms shall be used for convenience only and any terms or provisions which may be contained therein inconsistent with or in addition to those contained herein shall have no force or effect whatsoever between parties hereto.

**EFFECTIVE:**
This proposal is based upon the current cost of labor and materials and shall remain in effect for a period of sixty (60) days from the date hereof unless revoked by Quadrel in writing prior to acceptance.

**INDEMNIFICATION:**
The purchaser of this product ("Customer") hereby agrees to release, indemnify and hold harmless Quadrel and its agents, assignees and representatives for any and all liabilities, losses, costs, damages and expenses (including attorneys' fees and expenses) arising, directly or indirectly, from any and all manner of claims, demands, actions and proceedings that may be instituted against Quadrel on any grounds.
The Customer agrees to, at the Customer's own expense, promptly defend and continue the defense of any such claim, demands, actions or proceeding that may be brought against Quadrel, provided that Quadrel shall, within thirty (30) days of Quadrel receiving notice thereof, notify the Customer of such claims, demand, action or proceeding.
Quadrel shall at all times retain the right to defend itself and/or to otherwise participate in the defense of any such claim or action, and no settlement or other resolution of any such claims or action shall be finalized without Quadrel's written approval. Any failure by Quadrel to give prompt notice or provide copies of documents or furnish relevant data shall not constitute a defense in whole or in part to any claim by Quadrel against the Customer except to extend that such failure by Quadrel shall result in a material prejudice to the Customer.
The forgoing notwithstanding, if suit shall have been against Quadrel and the Customer shall have failed, after the lapse of a reasonable time after written notice to it of such suit, to take action to defend the same. Quadrel shall have the sole right to

defend the claim and shall be entitled to charge the customer with the reasonable cost of any such defense, including reasonable attorney's fees, and Quadrel shall have the right, after notifying but without consulting the Customer, to settle or compromise such claim on any terms reasonably provided by Quadrel.

This release and indemnification is and shall be binding upon the Customer, as well as the Customer's respective heirs, subsidiaries, affiliates, successors, assigns, agents and employees. If any provision or provisions of this release and indemnification shall be held to be invalid, illegal or unenforceable for any reason whatsoever, the validity, legality and enforceability of the remaining provisions aft h Agreement shall not in any way be affected or impaired thereby. No supplement, modification or amendment of this Agreement shall be binding unless executed in writing by all of the parties hereto.

Any order put on hold or left dormant for any reason for 90 days will be considered cancelled. See Cancellation Policy below.

**CANCELLATION POLICY:**

In the event of order cancellation, the 50% down payment is non-refundable. Customer may also be responsible for additional charges covering engineering resources expended and committed materials depending upon the custom nature of the project and the point in the order process in which the cancellation occurs.

**NOTE.** No salesman, representative or agent of Quadrel is authorized to give a guarantee, warranty or make any representation contrary to above.

Please sign and acknowledge acceptance to these terms and conditions_____Date_____

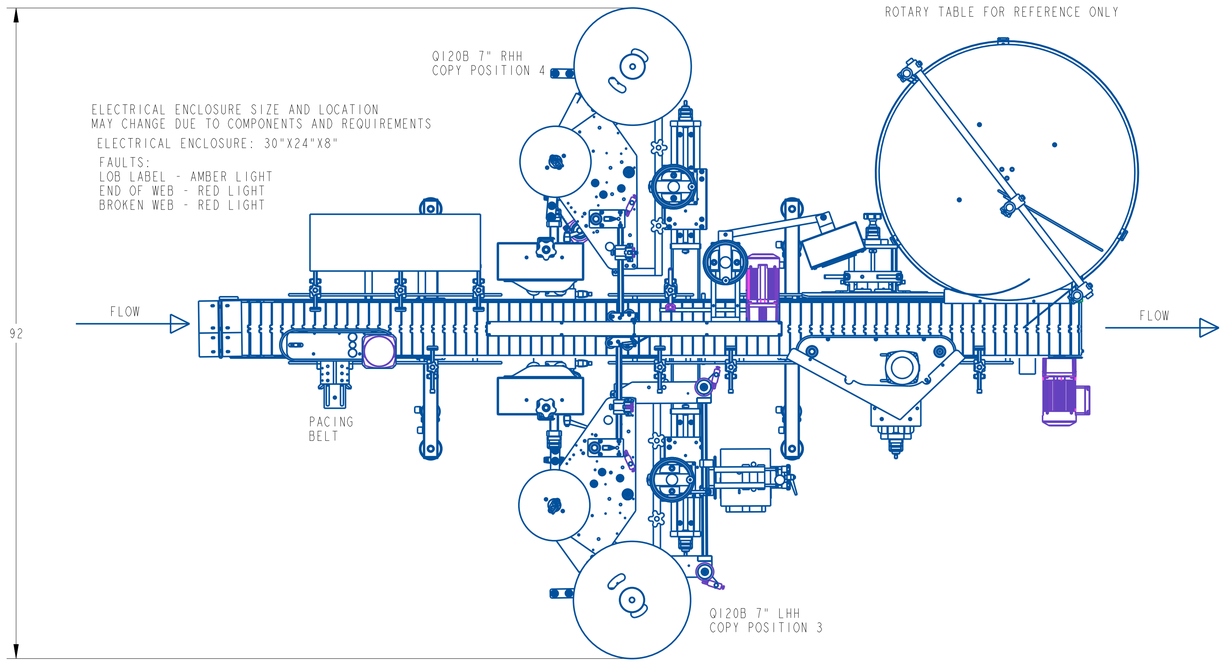


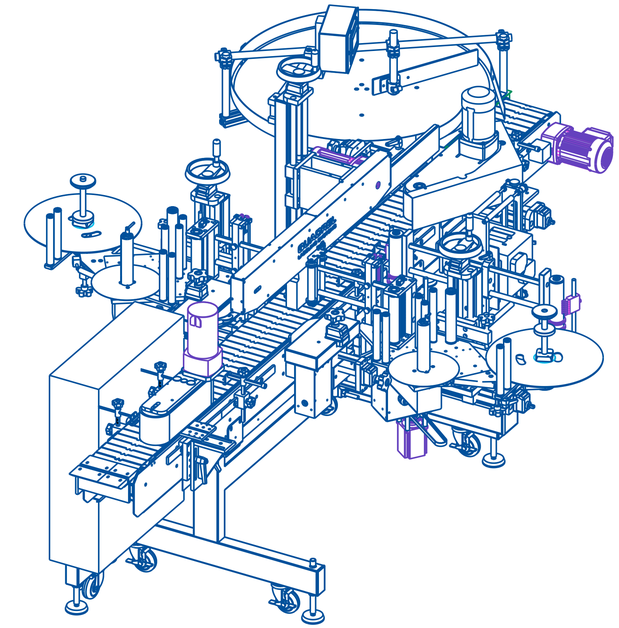

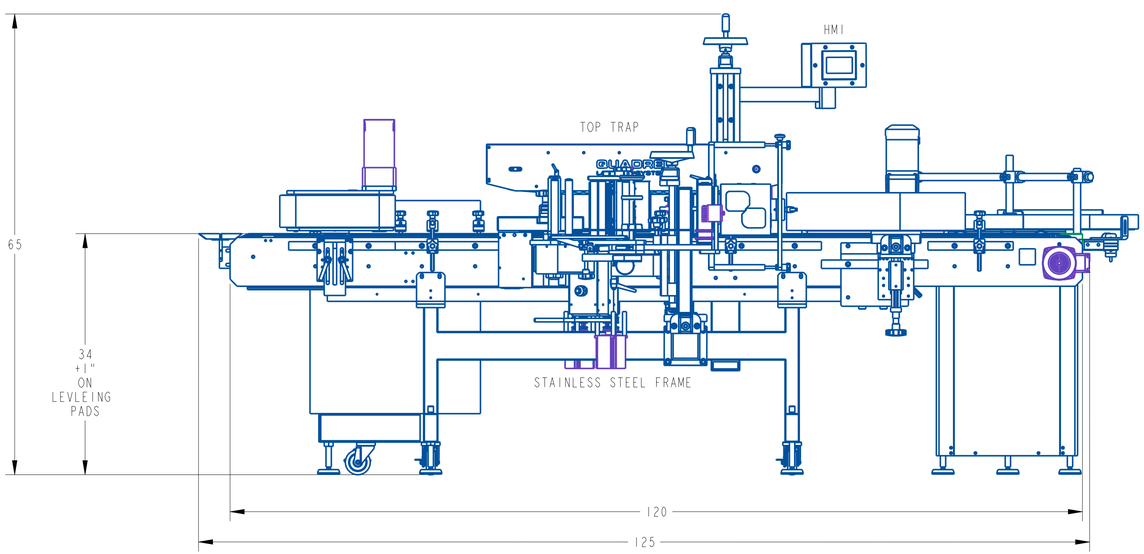


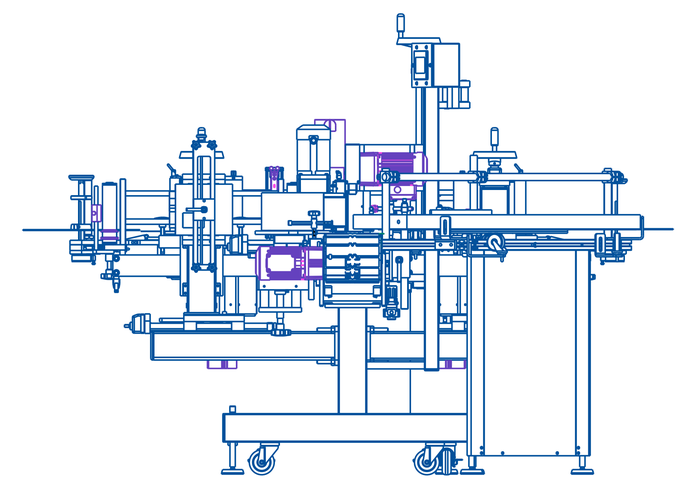

| REV | DATE | DESCRIPTION | BY |
|---|---|---|---|
| A | Nov-04-25 | NEW DRAWING | RDL |

THIS IS A PRO-ENGINEER DOCUMENT AND MAY NOT BE MODIFIED MANUALLY

UNLESS OTHERWISE SPECIFIED
DIMENSIONAL TOLERANCE
X ± .1
XX ± .01
XXX ± .005
ANGLES ± 30'
SURFACE FINISH 125
BREAK ALL EDGES .005/.015
CORNER RADIUS .010/.030
ALL ANGLES ARE 90°

QUADREL LABELING SYSTEMS
7670 JENTHER DRIVE
MENTOR, OHIO 44060
(440) 602-4700

SCALE: 3/32
DATE: Nov-04-25
DRW BY: RDL
CHK BY:
APPR BY:

ECONOLINE FRONT/BACK/WRAP LABELING SYSTEM

MAT'L

84237-100

SHEET 1 OF 1

# TABLE OF CONTENTS


1 MANUAL PREFACE

2 GENERAL DISCTRIPTION

3 WARNING/CAUTION SAFETY INSTRUCTION
- 3.1.1 SAFETY INTEGRATION
- 3.1.2 GENERAL SAFETY INFORMATION

4 INSTALLATION / REASSEMBLY INSTRUCTIONS

5 HMI GUIDE

6 SET UP SHEETS

7 LABELING HEAD
- 7.1.1 LABELING HEAD INFORMATION
  - 7.1.1.1 LOADING AND UNLOADING STOCK ROLL
  - 7.1.1.2 THREADING DIAGRAMS
  - 7.1.1.3 LABELER ADJUSTMENTS
  - 7.1.1.4 FUNCTION, OPERATION, & TROUBLESHOOTING
- 7.1.2 SIDE PLATE ASSEMBLY
  - 7.1.2.1 ASSEMBLY WRITE UP
  - 7.1.2.2 DRAWING
- 7.1.3 UNWIND ASSEMBLY
  - 7.1.3.1 ASSEMBLY WRITE UP
  - 7.1.3.2 DRAWING
- 7.1.4 IMPRINTER MOUNT – **(OPTIONAL)**
  - 7.1.4.1 ASSEMBLY WRITE UP
  - 7.1.4.2 DRAWING
- 7.1.5 PEEL PLATE ASSEMBLY
  - 7.1.5.1 ASSEMBLY WRITE UP
  - 7.1.5.2 DRAWING
- 7.1.6 BRUSH IMPRESSER ASSEMBLY – **(OPTIONAL)**
  - 7.1.6.1 ASSEMBLY WRITE UP
  - 7.1.6.2 DRAWING
- 7.1.7 DRIVE AND PINCH ROLL ASSEMBLY
  - 7.1.7.1 ASSEMBLY WRITE UP
  - 7.1.7.2 DRAWING
- 7.1.8 STEPPER/SERVO MOTOR DRIVER ASSEMBLY
  - 7.1.8.1 ASSEMBLY WRITE UP
  - 7.1.8.2 DRAWING
- 7.1.9 REWIND ASSEMBLY
  - 7.1.9.1 ASSEMBLY WRITE UP

7.1.9.2 DRAWING
7.1.10 SLOT SENSOR ASSEMBLY
7.1.10.1 ASSEMBLY WRITE UP
7.1.10.2 DRAWING
7.2 LABELING HEAD FAULTS – **(OPTIONAL)**
7.2.1 ASSEMBLY WRITE UP
7.2.2 DRAWING
7.2.3 END OF WEB / BROKEN WEB / LOW LABEL
8 MECHANICAL COMPONENTS
8.1.1 FRAME ASSEMBLY
8.1.1.1 ASSEMBLY WRITE UP
8.1.1.2 DRAWING
8.1.2 CONVEYOR ASSEMBLY
8.1.2.1 ASSEMBLY WRITE UP
8.1.2.2 DRAWING
8.1.3 HEAD SUPPORT ASSEMBLY
8.1.3.1 ASSEMBLY WRITE UP
8.1.3.2 DRAWING
8.1.4 PACING WHEEL/BELT ASSEMBLY/FEEDSCRW
8.1.4.1 GENERAL INFORMATION
8.1.4.2 ADJUSTMENTS
8.1.4.3 ASSEMBLY WRITE UP
8.1.4.4 DRAWING
8.1.5 WRAP STATION ASSEMBLY
8.1.5.1 GENERAL INFORMATION
8.1.5.2 ADJUSTMENTS
8.1.5.3 ASSEMBLY WRITE UP
8.1.5.4 DRAWING
8.1.6 BACK UP PLATE ASSEMBLY
8.1.6.1 GENERAL INFORMATION
8.1.6.2 ADJUSTMENTS
8.1.6.3 ASSEMBLY WRITE UP
8.1.6.4 DRAWING
8.1.7 TOP HOLD DOWN ASSEMBLY
8.1.7.1 GENERAL INFORMATION
8.1.7.2 ADJUSTMENTS
8.1.7.3 ASSEMBLY WRITE UP
8.1.7.4 DRAWING
8.1.8 PRODUCT DETECT ASSEMBLY
8.1.8.1 ASSEMBLY WRITE UP
8.1.8.2 DRAWING
8.1.9 CHAIN ALIGNER / HUGGER BELT ASSEMBLY – **(OPTIONAL)**
8.1.9.1 GENERAL INFORMATION
8.1.9.2 ADJUSTMENTS
8.1.9.3 ASSEMBLY WRITE UP

8.1.9.4 DRAWING

8.1.10 ROTARY ACTUATOR SQUEEGEE ASSEMBLY – **(OPTIONAL)**

8.1.10.1 GENERAL INFORMATION
8.1.10.2 ADJUSTMENTS
8.1.10.3 ASSEMBLY WRITE UP
8.1.10.4 DRAWING

8.1.11 STOP GATE ASSEMBLY / BLADDER – **(OPTIONAL)**

8.1.11.1.1 GENERAL INFORMATION
8.1.11.1.2 ADJUSTMENTS
8.1.11.1.3 ASSEMBLY WRITE UP
8.1.11.1.4 DRAWING

8.1.12 INFEED / OUTFEED BANK SENSORS – **(OPTIONAL)**

8.1.12.1.1 GENERAL INFORMATION
8.1.12.1.2 ADJUSTMENTS
8.1.12.1.3 ASSEMBLY WRITE UP
8.1.12.1.4 DRAWING

8.1.13 EJECT STATION ASSEMBLY – (**OPTIONAL)**

8.1.13.1.1 GENERAL INFORMATION
8.1.13.1.2 ADJUSTMENTS
8.1.13.1.3 ASSEMBLY WRITE UP
8.1.13.1.4 DRAWING

9 ELECTRONICS / SCHEMATICS

10 MAINTENANCE

10.1.1 GENERAL INFORMATION
10.1.2 BELTS
10.1.3 ROLLERS
10.1.4 SENSORS
10.1.5 CONVEYOR
10.1.6 CLEANING
10.1.7 WARRANTY

# Quadrel Labeling Systems
# Quality Manual

## Quality Statment:

Quadrel Labeling Systems strives to provide our customers with the highest quality labeling/sleeving solutions available on the market. In order to achieve total customer satisfaction, we shall adhere to the following objectives:

100% on-time delivery

zero defects

Value added service and support

Engineered solutions

Employee development and diversity

We will commit to continuously improve each facet of our business operations through implementation of, and compliance of this manual.

C. Wepl

Chuck Wepler
General Manager / President

Approved by: Jim Brazee
Issue Date: 1/1/2018

# 1 MANUAL PREFACE

Thank you for choosing Quadrel Labeling Systems. We have designed and manufactured this equipment with the upmost pride and care ensuring you the absolute best quality, maximum versatility and reliability.

This equipment is intended to be used only as described in this document. Quadrel Labeling Systems Inc. cannot be held responsible for the improper use or functioning of non-described functions of this machinery. Liability for any personal injury, loss of production or revenues, or property damage occasioned by the use of this manual in effect maintenance, operation, or repair of the equipment is in no way assumed by Quadrel Labeling Systems Inc. Anyone one using a procedure not recommended by the end user should first completely satisfy himself/herself that personal safety and equipment integrity will not be jeopardized in the method selected.

**DO NOT** attempt to install, operate, or adjust the labeling system without first reading and understanding the contents of this manual.

Only a trained person is to be permitted to operate this equipment. Training should include instruction in operation under normal conditions and emergency situations. Under no circumstances should an untrained person operate this machine.

This manual will provide operating instructions, parts listing and schematics. The information contained in this manual will help the user in his/her operations, troubleshooting, and maintaining the machine in good operating conditions. Information, illustrations and specifications contained in this manual are based on the latest product information available at the time of this manual release. Quadrel Labeling Systems Inc. reserves the right to alter and substitute information contained herein at any time.

Due to the customization it is also possible that you have received a different variation of this equipment, with several different options. Some pictures used in this manual may not totally reflect your configuration, although the labeling is completely the same.

**All rights reserved** while every precaution has been taken in the preparation of this manual, Quadrel Labeling Systems Inc. cannot be held responsible for errors, omissions, damages, loss of production, or revenues resulting from the use of the information contain herein.

## 2 GENERAL DISCRIPTION - ECONOLINE

In-line labeling machines apply labels to a wide variety of container shapes. In addition to conventional cylindrical containers, the in-line labeler can be used with specially contoured, elliptical or flat-sided containers. In-line labelers are manufacturing in a variety of configuration. Diagrams illustrate standard in-line labeler arrangements for different container designs.

The Econoline is a compact and economically priced labeling system. Simple to set-up, operate and maintain available in front/back or wrap configurations. Features include stainless steel construction and microprocessor control with speeds up to 250 products per minute (depending labeling head). This provides electronic synchronization of the labeling process and stores up to 50 label/ product presets. The “no tool” product changeover and modular design makes this inline labeling system ideal for pharmaceutical, cosmetic, automotive, chemical, food, personal care and many other markets.

# 3 WARNING/CAUTION SAFETY INSTRUCTION

Where safety is dependent upon starting or stopping devices, or both, they are to be kept free of obstructions that could endanger personnel.

The areas around loading and unloading points are to be kept free of obstructions that could endanger personnel. Instruct personnel working on or near this equipment as to the location and operation of pertinent stopping devices.

This equipment is to be used only for the purpose for which it is constructed.

Under no circumstances are the safety characteristics of this equipment to be altered.

Conduct routine inspections and corrective / preventive maintenance measures to ensure that all guards are installed and function properly. Alert personnel to the potential hazards indicated by the safety labels on this equipment.

## 3.1 SAFETY INTEGRATION

The end user's safety risk assessment will be the guiding document for proper integration of the equipment provided. Consideration of the following guidelines is recommended in order to achieve a safe result:

- Open areas under the equipment are to be guarded by the end user to prevent entry.
- Where conveyor flight lugs or product enters or exits the equipment, proper guarding and interlock are put in place by the end user to ensure mitigation of shear/jam points.
- The end user is responsible for properly guarding drive components on equipment that requires mechanical drive integration.

## 3.2 GENERAL SAFETY INFORMATION

This Quadrel Labeling System is engineered to feed and apply labels on your products. In designing the device, Quadrel valued personal safety; however we would like to draw your attention to the following safety acknowledgments.

| | |
|---|---|
| ⚠ **WARNING** | Hazards or unsafe practices, which **COULD** result in severe personal injury or death. |
| ⚠ **CAUTION** | Hazards or unsafe practices, which **COULD** result in minor injury |
| ⚠ **CAUTION** | The presence of safety systems in these units does not exempt the operators to act cautiously, avoiding behaviors that could |

endanger their health or the equipment. These models are engineered to feed and apply labels on your products. In designing this device, Quadrel valued personal safety; however we would like to draw your attention to the following safety acknowledgments.

- Operators should know the basic operations and setup procedures before operating this equipment.
- Safe operations should be maintained at all times.
- Know the location of E-stops and power switches prior to operating machinery such as this.

**⚠ WARNING**

To reduce risk of fire, electrocution, or other personal injury when operating. Follow basic safety precautions, including the following:

- This equipment must have an operator attending the machine at all times to monitor the operations. **DO NOT** leave this equipment unattended during maintenance or perform any maintenance unless the e-stop condition has been activated or power turned off.
- The electrical power to device is: ____220__ Volts, _SINGLE (1)_Phase, __60__Hz, __15__Amps.
  While installing make sure it's properly configured and connected by a qualified electrical technician.
- **DO NOT** by pass any of the safety circuits or safety features designed into this equipment.

- ALWAYS turn off **power and pneumatics** before performing repairs.
- The doors on all electrical enclosures must be closed. All covers on labeling heads must be on labeling heads. (if applicable)

- This device is built to perform in humid conditions, but must not be pressure washed. Wiping down the device is the recommended cleaning method.

- Do not stand, sit, or allow any personnel to be within reach of the tamp cylinder/ swing arm activation (if so equip).
- Report any malfunctions, or problems with the equipment to qualified maintenance personnel for repair or adjustments that may be required.
- Keep hands clear of moving parts. Do not place hands near labeling head when in operation.

For systems containing conveyors, you must be vigilant with loose clothing or bodily parts as they can get caught in the conveyor's belt or chains as direct injury or death can incur. **DO NOT** use the conveyor as a working platform or walkway.

**TUCK IN ANY LOOSE CLOTHING. DO NOT WEAR TIES. PENDANTS, JEWLERY OR ANY OTHER ARTICLE OF CLOTHING OR ACCESSORY THAT MAY GET CAUGHT ON ANY PORTION OF THE SYSTEM.**

***FOR PROLINE SYSTEMS ONLY***

**CASTERS WERE IMPLEMENTED FOR EASE OF SHIPPING PURPOSES ONLY. PLEASE USE CAUTION WHEN MOVING PROLINE THROUGH FACILITY. THE PROLINE RECOMMENDED USE: SET IN PLACE/POSITION WITH LEVELING PADS DOWN TO SECURE.**

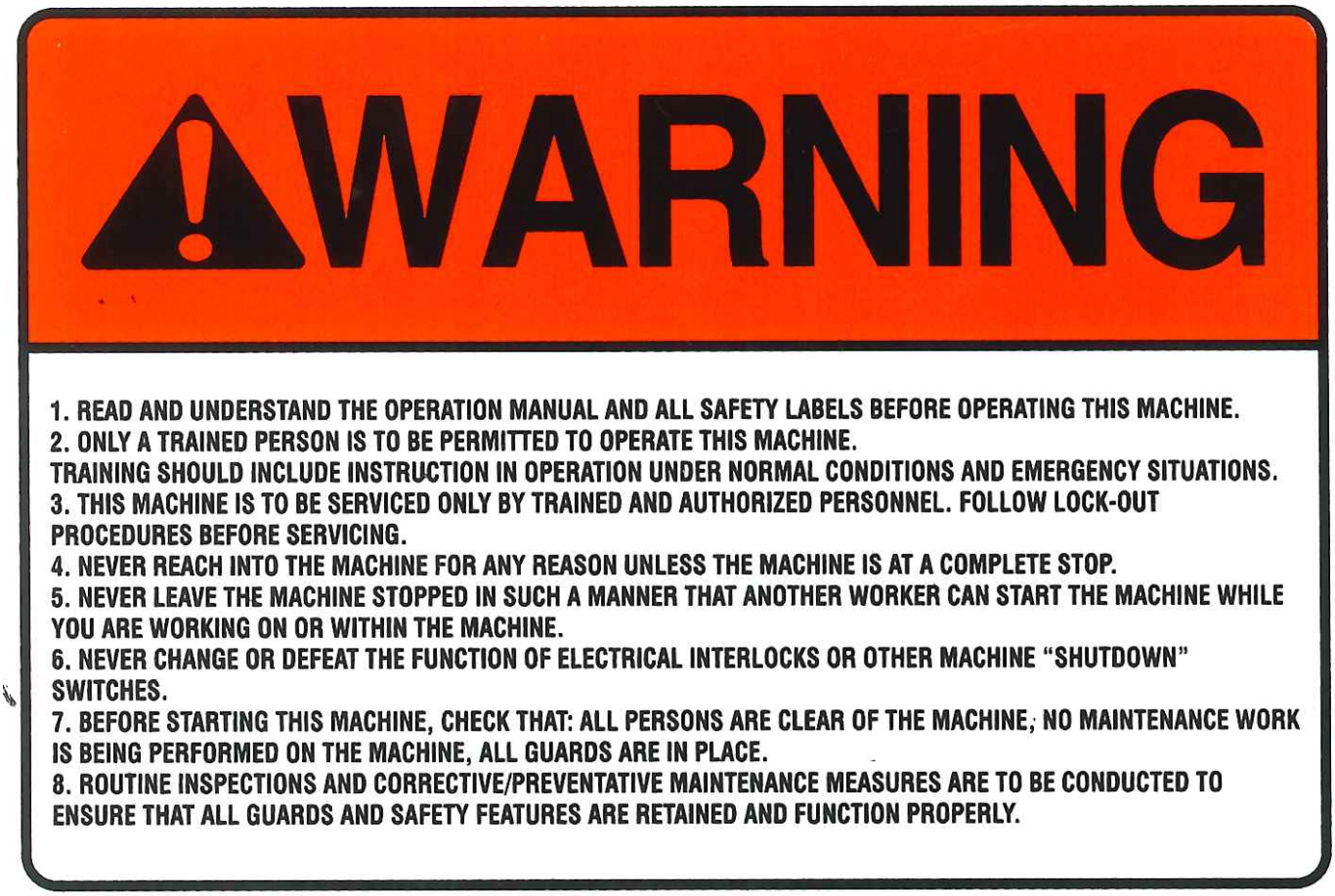

# Using VFDs On GFCI Devices

**By Bill Szatkiewicz, Senior Software Engineer**
**KB Electronics**
**for more information, email: info@kbelectronics.net**
**or visit: www.kbelectronics.com**

The National Electrical Code, or NEC, continues to expand protection requirements for safety reasons resulting in an increase in Ground-Fault Circuit-Interrupter (GFCI) outlets being used in more environments. As a result, the Variable Frequency Drives (VFDs) industry is finding more instances of VFDs being powered from GFCIs. VFDs introduce high frequency harmonic content which may cause nuisance tripping on some GFCI devices. This paper is intended to assist anyone that needs to use a VFD on a circuit with GFCI protection. KB Electronics has developed special VFDs suitable for use with most GFCIs*.
* Please contact KB Electronics with information regarding your specific GFCI.

**What is a VFD?**

A VFD (also termed adjustable frequency drive, variable speed drive, AC drive, adjustable speed drive, micro drive, motor control, or inverter drive) is a power conversion device that will accept normal fixed branch circuit voltage of (115V or 230V) and frequency (50 Hz or 60 Hz) and allow the operator to control the speed of an induction motor (AC Motor) by varying the output voltage and frequency. A simplistic version of a typical VFD system is shown in Figure-1.

In addition to operator controllability, the VFD with soft start/stop features offers extended equipment life, increased performance, reduced maintenance, protection from excessive currents and voltages, as well as energy savings.

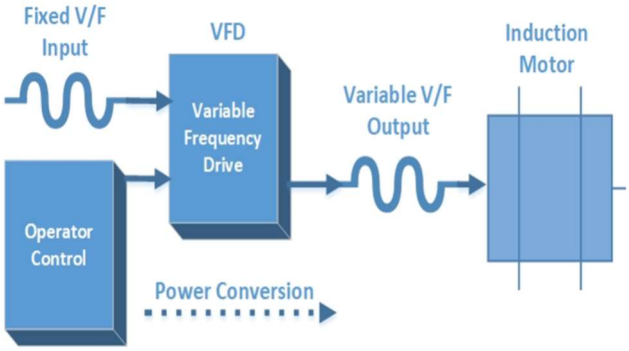


*Figure-1: Typical VFD System*

**What is a GFCI?**

A GFCI (shown in Figure-2) is a circuit breaker device which is designed to protect people from hazardous shock or electrocution by shutting off an electric power circuit when it detects current flowing in a way that it is not meant to, such as through water or a person.

*Figure-2: Typical GFCI Outlet*

The GFCI is intended to protect people from electrical shock, therefore, it is completely different from a fuse in the sense that it needs to shut off the electric power circuit at a low current, typically no more than 5 mA, in a quick amount of time (less than 1/10 of a second).

The GFCI does this by measuring and comparing the amount of current flowing in the ungrounded (hot) and grounded (neutral) conductors of the circuit. If the GFCI detects an imbalance in the circuit, it immediately shuts off the circuit.

**Why Nuisance Trips Occur with Standard VFDs**

Standard VFDs, when powered from GFCI outlets, can cause the GFCI to trip due to the leakage currents generated from the high switching frequency of the VFD's power devices and the harmonics associated with them. These high frequency leakage currents are not at the base frequency of the drive output which is normally 50 Hz or 60 Hz. These high frequency leakage currents, typically greater than 4 kHz, may cause the GFCI to trip because the GFCI is designed to work with 50 Hz or 60 Hz frequency inputs, not this higher value.

The high switching frequency of the VFD's power devices induce more capacitive-coupled currents, since a capacitor approximates a short circuit at high frequencies. This creates common-mode noise, referred to as leakage current, which travels through ground and can cause the GFCI to trip. The path to ground is made through the motor bearings or auxiliary equipment bearings.

In addition to the high switching frequency of the drive, there can be many other contributing factors which cause the GFCI to trip. Some drives have built-in filters which couple additional leakage current to earth ground. Other drives use external filters and replacing them with a low leakage filter may help.

One way to help determine if the GFCI tripping is occurring from the input filter or the VFD output is to remove either the input filter or the motor and observe if the GFCI still trips. For example, if the input filter is easily removed and doing so prevents the GFCI from tripping, the source of the leakage currents tripping the GFCI was largely from the input filter.

Another method is to disconnect the motor. If doing so prevents the GFCI from tripping the contributing source of leakage current is most likely from the output stage of the VFD. However, most often than not, the GFCI is tripping from a combination of the two and improvements on both the input and output will help.

Long motor power cables can also create noise spikes. These long leads add more capacitance which increases noise spikes from the fast switching power devices of the VFD. Use a VFD rated cable with the shortest leads possible when connecting the motor power cables. A choke on the VFD's motor outputs may help reduce noise spikes.

In addition, ensure that motor cables are properly shielded, sized, routed, terminated, and grounded at both the motor and drive.

**KB's GFCI Solution**

KB's engineering team has studied VFDs powered from a variety of GFCI devices. A solution has been created which considers all contributing factors to get a best-case scenario that successfully works with most GFCIs.

KB investigated switching frequencies and developed custom switching frequency algorithms to reduce audible noise and leakage currents. High frequency noise spikes and ringing were reduced by modifying our proprietary power circuits for optimal results. In addition, output chokes, low leakage filters, and shielded cable were introduced, if needed, to find a GFCI solution.

**Conclusion**

KB has had great success providing VFDs that work with GFCIs for numerous original equipment manufacturers (OEMs). KB offers a full range of motor controls (shown in Figure-3) which can be customized to work with GFCIs. Let KB Electronics provide a solution for you.

*Figure-3: VFDs Available from KB Electronics*

# Unboxing & Installation of your

# Quadrel Labeling Systems Machine

This section of your manual is aimed towards making the transition from Shipping Crate to Assembly line less Dramatic. If you have scheduled an install with one of our Professional Technicians the set-up of your machine will be a breeze. If not your manual as all of the information needed to get you going. In this section there may be some equipment shown that does not apply to the machine you purchased.

*NOTE* This is general instruction for all equipment (your equipment may vary slightly).

Let's get started…

First things first, check your crate/box/machine for damage. If there is damage please note the exception and contact Quadrel immediately. Any extra boxes or pallets will be either in your crate or tethered to the crate or pallet. Once you have inspected your shipment you can open the crate. Check packing slip Bill of lading against boxes received. Notify Quadrel of any discrepancies.

Carefully remove all banding on the legs, misc. boxes and assemblies in the crate or on the pallet. If your machine is wrapped in bubble wrap or plastic wrap go ahead and carefully cut and remove that as well. Ensure you are wearing the appropriate safety gear when removing your machine from the crate.

Ensure all plastic wrap is removed from the assembly you are removing the support from before removing the support.

Remove the supports under your labeling heads, wrap station, top trap, HMI, Pacing wheel or belt. See images for various supported assemblies.

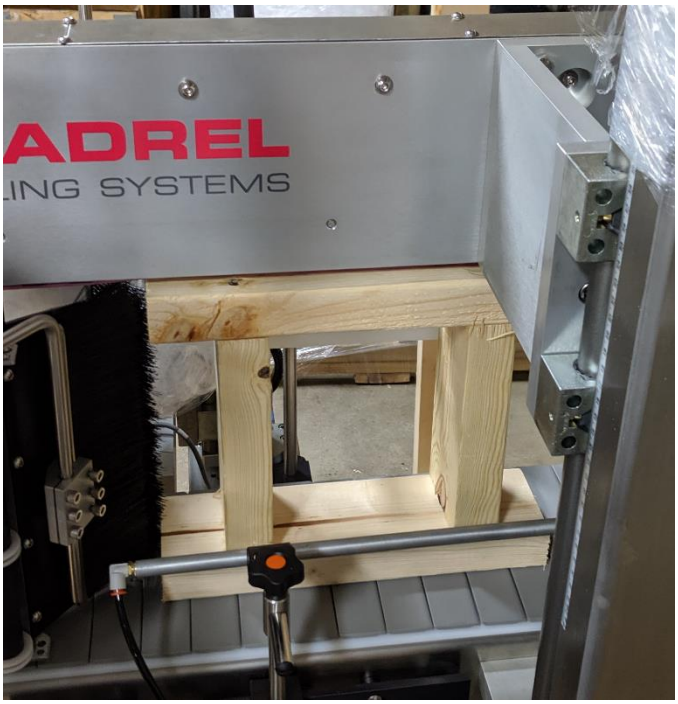


Most assemblies supported have a tool-less vertical adjustment using a knob or hand wheel.

The hand wheel may be wrapped to the assembly to prevent damage.

Remove the hand wheel from the wrap, then fasten the hand wheel to the square end on the lead screw using a 3/32 “L” handle Allen wrench.

Turn the handle/knob to raise the assembly this will take the weight off the supports so you can remove them.

Top Trap Support (top) Labeler Head Support (bottom) Plastic wrapped hand wheel (right)

All top and bottom labeling heads will be supported

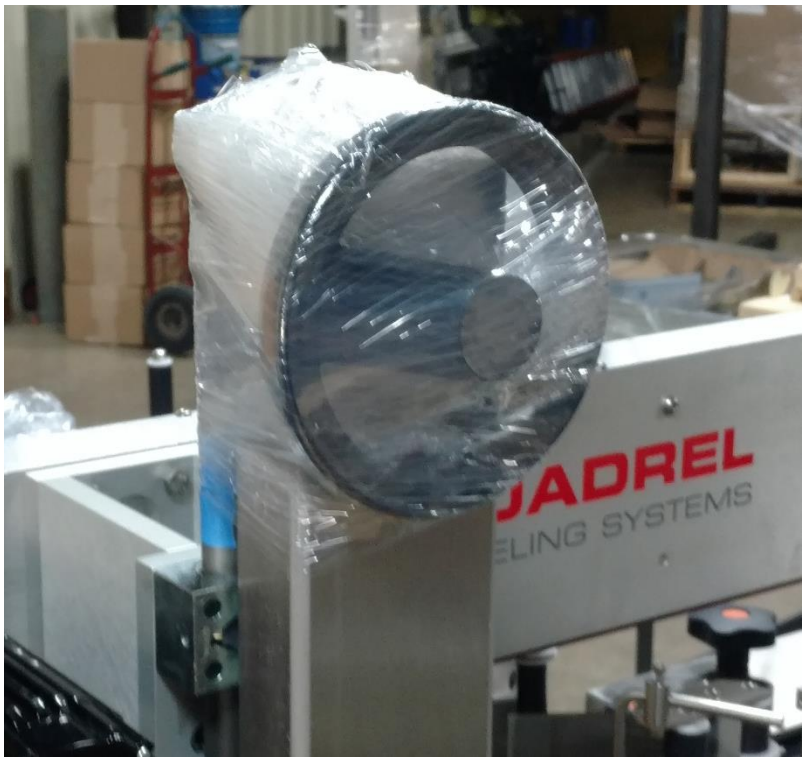


similar to the image shown on the left.

Wrap stations will have supports similar to the image to the right. These supports do not require moving the assembly.

Pacing belt assembly supports can be removed will be without raising the assembly.

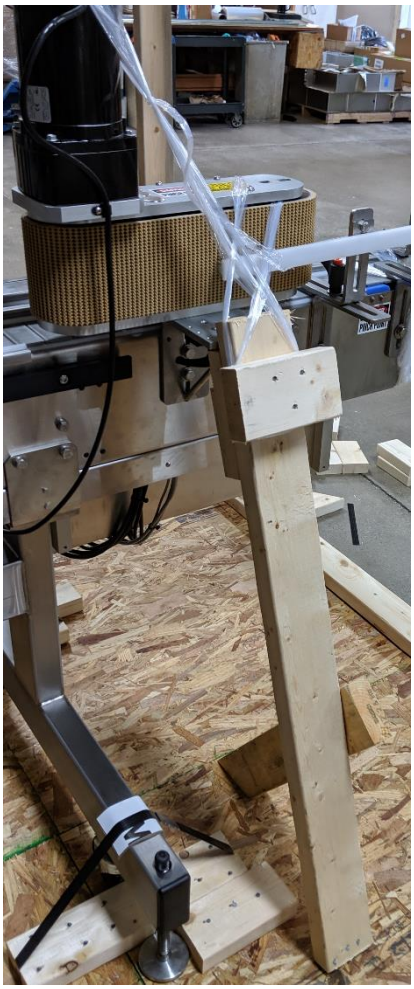

Pacing wheels supported as shown

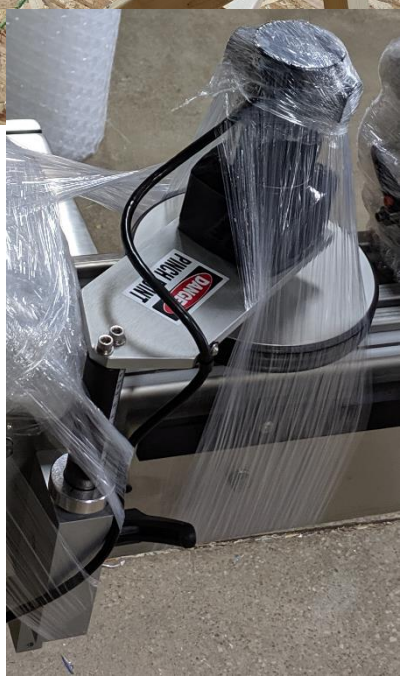

Often the head support will be moved in shipping or moved to be supported. When you are setting up your machine refer to your set up sheet in this manual. There are scales on the side of the assembly to line the carriage up to (as shown in the Image to the left and below).

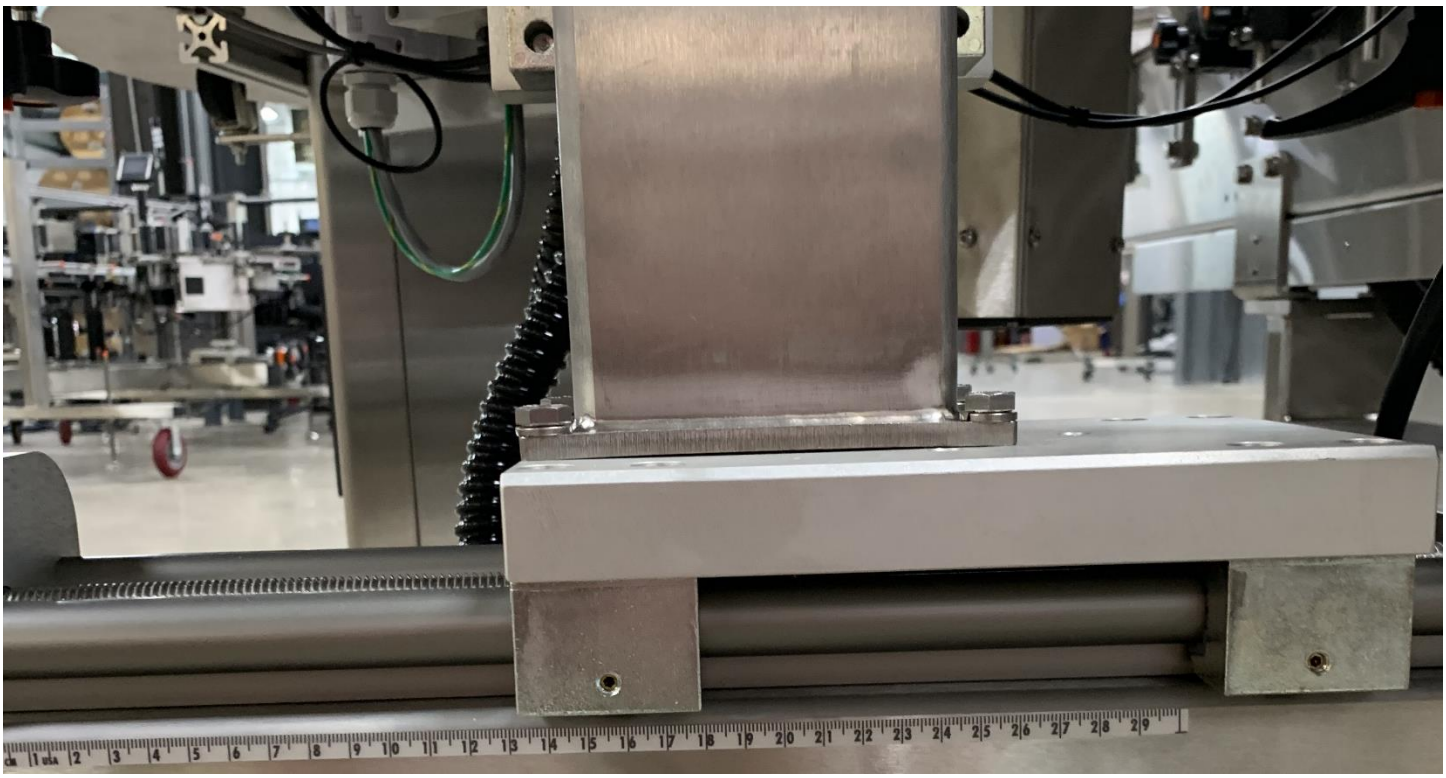

Peel plates with or without the rods may be removed from the labeling head to move the head all the way in during shipping.

All assemblies removed will be bubble wrapped then plastic wrapped to the machine (as shown in image on the right) or in box on the pallet the machine is on (as shown in image below).

Mount the peel plate assembly using a 5/16 L handle Allen wrench (as shown in image on the left). The bolts are located in the assembly. You simply put the wrench in the quick change access holes to loosen or tighten the assembly.

*NOTE* When you are setting up your machine make sure the peel plate assembly is perpendicular to the conveyor. When the peel plate assembly is on the rods there is a small amount of play allowing you to make small adjustments to the assembly.

If you have the peel plate rods removed with the peel plate assembly and the label detect assembly (as shown below).

All assemblies removed will be bubble wrapped then plastic wrapped to the machine or in box on the pallet the machine is on.

First back the head out all the way. Locate your peel plate assembly and slide it into the holes in the drive roll assembly (as shown on the left of the image above). Make sure you take the bolts out of the end of the rods before putting them into the drive roll assembly.

Fasten the assembly to the drive roll with the bolts supplied using a 5/16 L handle Allen wrench. Make sure you have the lock washers on the bolts.

*NOTE* When you are setting up your machine make sure the peel plate assembly is perpendicular to the conveyor. When the peel plate assembly is on the rods there is a small amount of play allowing you to make small adjustments to the assembly.

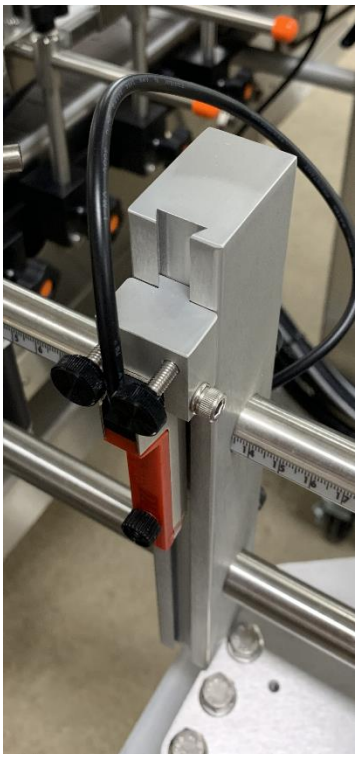

When the peel plate rods are removed the label detect sensor is removed with it (show in image to the left). The sensor is locked into place so it won't move or need adjusted. All that will need done is simply reconnect the sensor to the zip port.  To re-connect the sensor first locate the zip port (as shown in image on the right). The zip port is located under the head on the chassis or mounting plate. Take the cable coming from the sensor, route it neatly under the head, and screw it into the zip port where it says "label detect".

Some machines may have the unwind flange (shown in image to the right) removed to protect the flange during shipping do to the width of the machine.

All assemblies removed will be bubble wrapped then plastic wrapped to the machine or in box on the pallet the machine is on.

First, slide the unwind flange (with the collar facing towards you as shown in image to the right) over the unwind shaft. Make sure the top of the flange is 1 ¼ inches off the side plate.

Then, lock into place by tightening the collar with a 5/32 L handle Allen wrench.

Slide the quick lock collar over the shaft by lining the set screw up with the flat. The collar locks into place by rotating the collar 90 degrees.

Some machines may have the rewind flange (shown in image to the right) removed to protect the flange during shipping do to the width of the machine.

All assemblies removed will be bubble wrapped then plastic wrapped to the machine or in box on the pallet the machine is on.

First, slide the rewind flange (with the collar facing away from you as shown in image to the right) over the rewind hub make sure the flange just above the rubber bumper roughly 1/2 inch off the side plate.

Then, lock into place by tightening the collar with a 5/32 L handle Allen wrench.

Rails and transfers on the infeed and outfeed may be removed for shipping purposes. They will be wrapped in bubble wrap and wrapped to the machine. Carefully remove wrap and place in position as shown lock into place by tightening the knobs or ratchet handles.

*NOTE* Your machine may have a different rail system either adjustment is tool-less and fastened by a knob of ratchet handle.

End transfers will be wrapped in bubble wrap and plastic wrap. They will be located in a box on the pallet with your machine or wrapped to the machine itself.

Fasten the end transfer plate to the machine using a 5/32 L handle Allen wrench and the supplied 10-32 socket head screws. Ensure the transfer plate is both level with the conveyor and DOES NOT hit the conveyor chain.

Stack lamps are usually placed at the highest point of the machine and for that reason they are either removed or rotated 180 degrees. The stack lamp will wrapped in bubble wrap and wrapped to the machine.

If the stack lamp is rotated then all you need to do is remove one of the bolts, rotate the stack lamp and put the screw back in. We use various screws on stack lamps you will need one of the following tools for the job.

-3/32 L handle Allen wrench

-1/8 L handle Allen wrench

-5/32 L handle Allen wrench

-3/16 L handle Allen wrench

-1/2 open end wrench

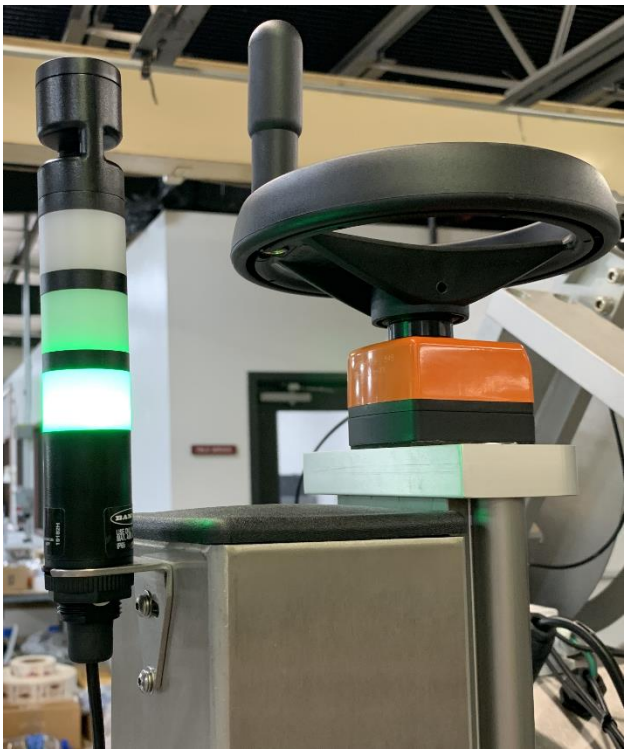

HMI over head touch screen displays may be laid flat across the top of the enclosure wrapped in bubble wrap and plastic wrap.

Carefully remove the plastic wrap and bubble wrap.

Rotate the HMI 90 degrees and slide into the mount on the enclosure.

Fasten the pole in place by tightening the 2 set screws on the mount with a 6MM L handle Allen wrench.

The HMI may be enclosed in a wooden support off the enclosure to hold it in place during shipping.

If HMI is located remotely off the enclosure it will still be supported during shipping.

If so, carefully remove the supports and you are done.

All printers, printer controllers and lasers are removed from the machine when shipping and placed in the manufacturer's box. The cabling will remain on the machine for ease of installation.

The printer is mounted to the printer mount with 1 ¼-20 ratchet handle. Make sure you line up the indents in the plates with the brass nut on the threaded rod. Then slide the ratchet handle through the center of all of the blocks and tighten. Plug in the cables and you are done.

Table top printers with printer tables will ship in separate boxes or pallets (as shown to the left) the printer will be disconnected and placed in the manufacturer's box. The table will either get banded to the pallet with the machine or a separate pallet tethered to the machine pallet. Printer tables may be connected to the machine via weldment or a remote from machine. If you have a weldment connected table, refer to the lay out drawing of your machine in this manual. Fasten the weldment to the frame of the conveyor using the supplied hardware and an open end wrench. If the table is remote then move into the desired position referring to your layout drawing. Remove the printer from the box set on the table and plug in the pre-wired connectors.

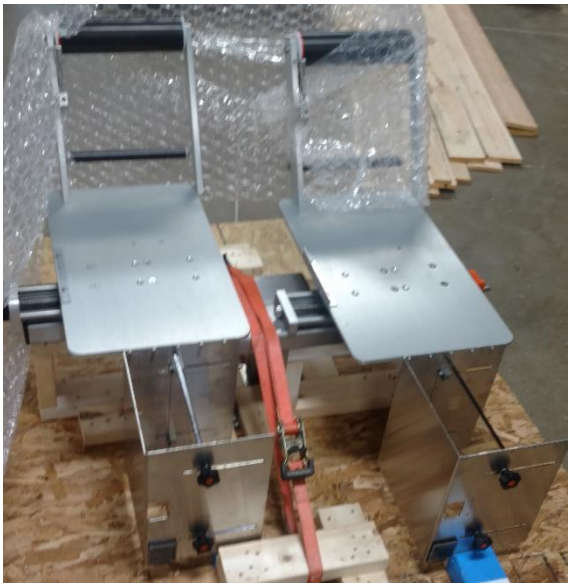

Print and apply printers will be removed from the labeling head as well and placed in the manufacturer's box. Your labeling head will likely ship in its own boxes with a few of the assemblies or flanges removed. Occasionally your head on a stand will ship on a framed pallet which will requires little work to get started.

The unwind flange is installed like the previous one discussed previously.

Remove the printer from the box and place it into the opening of the labeling head (as shown in image to the right). Fasten the printer to the side plate of the labeling head using the supplied (5) 10-32 socket head screws and a 5/32 L handle Allen wrench. Then, plug the printer in.

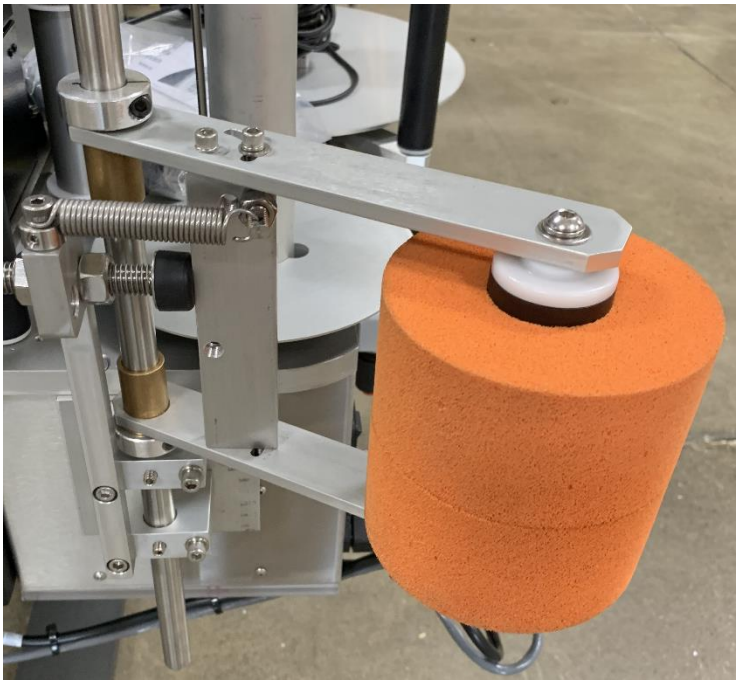

The corner wrap modules will be removed for shipping purposes. They will be wrapped in bubble wrap, plastic wrap, and placed into the box with the labeler.

Take out of the box, carefully remove the wrapping.

Then mount to the labeling head with (4) ¼-20 bolts using a 3/16 L handle Allen wrench.

To prevent kinking of the air lines during shipping on our q34 print and apply labeling heads. All lines are pulled and labeled to the corresponding color. The hoses are color coded and marked. Simply plug in hose into the matching color (as shown in image to the right).

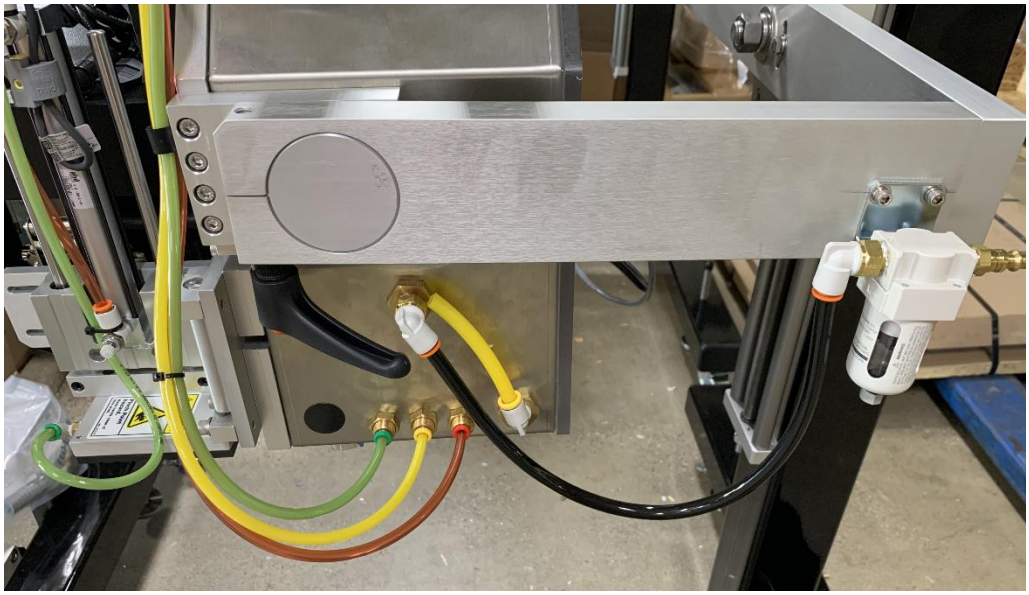

Rotary accumulation tables are banded to a pallet and wrapped.

These tables usually operate independently to the machine.

Carefully un-band and unwrap the table.

Line it up to the transfer plate on the conveyor.

Level the table using the leveling pads.

Plus in and adjust speed through the control box.

Sleeving applicators are typically on a stand and will ship on a pallet. They will be banded have many supports and be wrapped to protect the machine during the shipping process.

Carefully remove the banding and wrapping.

Raise the head and remove the supports.

The pallet will contain boxes with. Misc assemblies and or parts (ie mandrels).

Below is an image of the mandrel. The mandrel is the most precise and important part of the sleever system. Always handle the mandrel extremely carefully.

Your mandrel will be located on the machine pallet tethered to the machine. It will be wrapped and in a box or tube (as shown below).

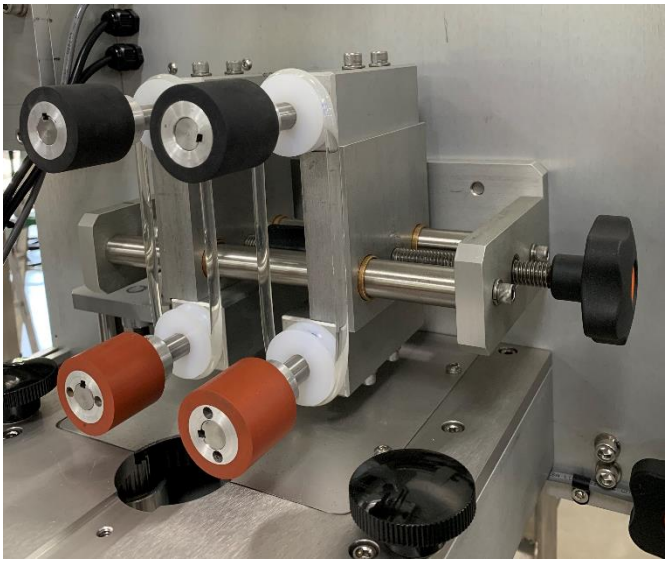

Carefully remove the mandrel from the packaging.

Rotate the black handle to move the throw down rollers apart far enough to slide the mandrel in.

Ensure each roller is between 2 bearings, the fin on the top is between the sensor, and the cutter blades are in line with the cut in the mandrel.

Rotate the black handle to move the throw down rollers closer to the mandrel pinching it in the middle. DO NOT OVER TIGHTEN THE THROW DOWN ROLLERS INTO THE MANDREL. They need to be just tight enough that the bearing spins and a label feeds through.

Proline machines with guarding will either be left on the machine and have wooden supports to protect during shipping or the guards are removed and places on a pallet.

If the guarding has supports carefully remove the supports from the guarding.

If the guarding is removed from the machine each panel will be labeled and the machine will be labeled to make it easy to figure out which door goes where.

The doors are fastened to the frame of the machine with the supplied hardware.

Line the hinges up to the holes on the frame put the bolt through.

Tighten a nut on the opposite end with the supplied flat and lock washer.

During shipment if the conveyor gets skewed you may need to re-square it. First check the conveyor with a square to verify (as shown in images below). If the conveyor needs adjusted, adjust the conveyor by slightly loosening the 4 bolts connecting the 2 sections on conveyor you would like to adjust (as shown in image to left).

Make your adjustments and check the top and side with a square. Placing a square across the top will check the squareness vertically. Placing a square along the side will check squareness horizontally.

When the conveyor is square tighten the bolts and you are all set.

When shipping a proline with an extended boom the dual swiveling elbows in the center of the boom get flipped 180 degrees to allow the machine to have enough over head clearance to ship safely (shown in image below).

Below are the instructions to flip the elbows to the correct configuration (as shown in image below)

Ensure the overhead controls are safely supported by a tow motor or at least 2 people so it does not fall when disconnecting the elbows.

Locate the 2 screws on the top and 2 screw on the bottom holding the prospective covers on.

With a t25 torx bit screw driver, loosen the 2 bolts holding the cover on the top and bottom.

With the cover off you can now access the 4 bolts holding each of the tubes in place.

Ensure the overhead enclosure is supported enough to hold for a few minutes while you loosen the bolts and flip the elbow.

Using a 6MM L handle Allen wrench loosen the 4 bolts on the top and bottom tube.

Quickly pull the tubes out and rotate the elbow as shown below.

BEFORE

AFTER

Slide the tubes in. the overhead enclosures elevation is going to change when flipping the elbows if you have it supported via tow motor you will have to raise it.

Fasten the 8 bolts with a 6MM L handle Allen wrench.

Fasten the covers to the top and bottom elbow using a T25 torx bit screw driver.

To the left shows the correct orientation of the dual elbow boom for the overhead enclosure.

If you have any questions please give our professional technicians a call.

# HMI GUIDE

# Operator Interface Guide

## Econoline Labeling System with Q105/110 Labeler(s)

For SB21820-100_v000 files

## Keyence N24 PLC with Delta HMI

**General Overview:**

The HMI communicates to a PLC and Motor Frequency Drive(s). The HMI is the master device in the system, initiating communications to all devices and passing data to each of them.

# Table of Contents

Opening Splash Screen....3
Main Screen for Front/Back System:....4
Main Screen for Single Labeler system:....6
System Menus:....7
Recipe Menu:....9
Labeler Menu:....10
Labeler Service Menu:....12
System Speed Menu:....13
System Speed Calibration Menu:....14
Product Flow Menu:....15
Three Roller Indexer Menu:....17
Three Roller Indexer Setup Menu:....18
Wipe Menu:....19
Counters Menu:....20
User Menu:....21
Password Menu:....22
Fault Menu:....23
Fault Messages and Indicators:....24
Warning Messages....24
Fatal Messages....24
Fatal Messages, cont....25

## Opening Splash Screen

Upon initial power up, the terminal will initialize and display a splash screen. The HMI will look at the PLC to determine which screen to display (Front/Back or Side/Wrap)

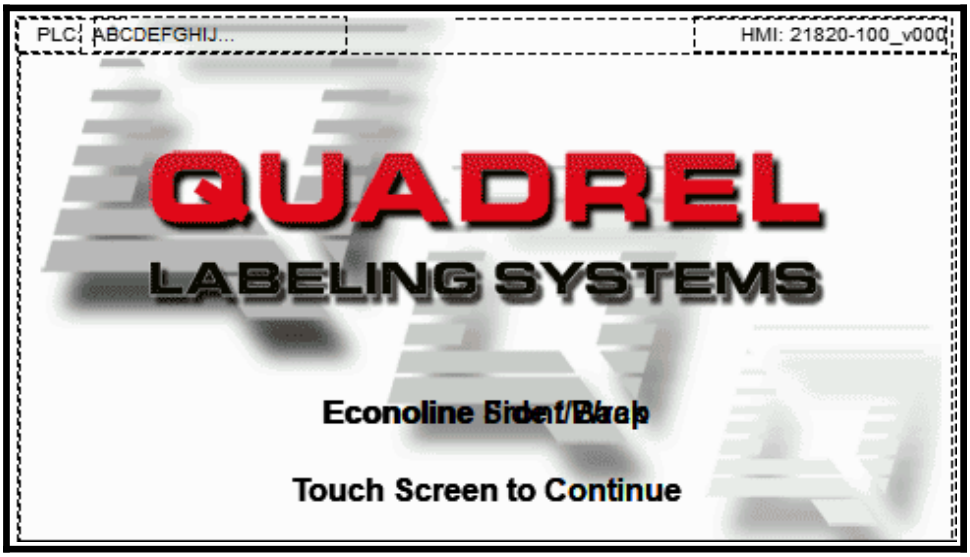


Note that the screen will be on a slight delay while the PLC and Drive boot up. During this time, the screen will display "System Starting. Please Wait"

### Button / Indicator Reference:

**Menu Navigation Buttons:** Navigation buttons will be purple circles with white outlines and icons of the target screen. Some buttons will have text below them to identify the target screen.

**Standard Buttons:** Standard buttons are used to turn features on/off, reset faults, clear counters, or various other functions that require operator control. Toggle buttons will typically have icons to reflect the status of the function that is being toggled while momentary buttons like Resets are circular and do not change images/colors.

**Indicators:** Status Indicators will be circular and will change color based on states. Mode indicators will be oval in shape and will change colors and texts based on states.

**Numeric and Text Displays**: Numbers or Text displays will have a light orange background with black text, surrounded by a grey border. These are used to reflect numbers or text.

**Numeric and Text Inputs:** If a number can be entered, the button will have a dark green background with white text. The right side of the button will have a touch icon signify that it is an entry box.

**Text Descriptions:** If the description above an entry point or toggle is flashing red, it indicates the current value does not equal the saved value in the recipe. This is a reminder that the recipe must be saved in order to store the current value.

## Main Screen for Front/Back System:

After touching the splash screen, the touch screen will display the Main screen. You can also get to the Main screen by pressing the Home icon (pictured left).

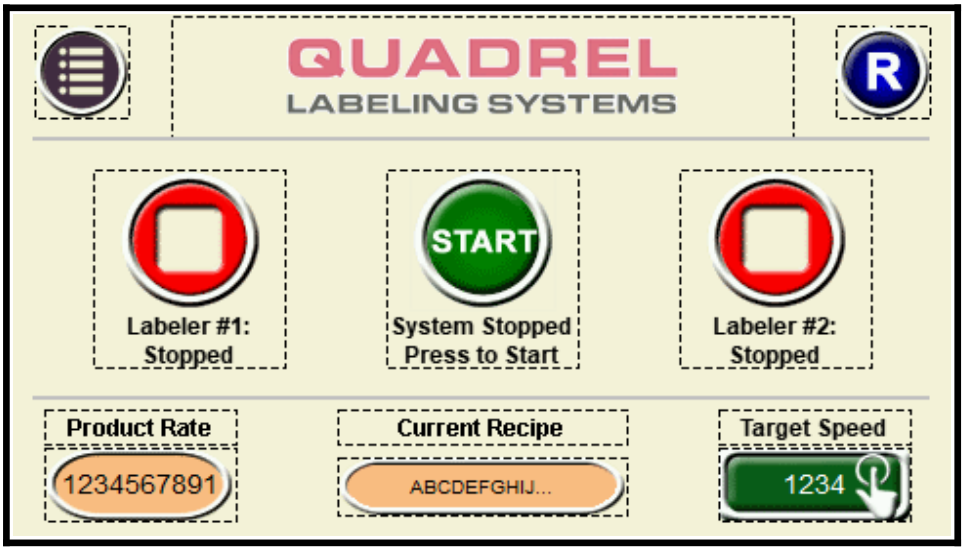


**Menus Button:**
Pressing this button will display all of the System Menu buttons available to the system as it is configured.

**Fault/Message window:**
The Red box at the top of the screen will appear if there is an active fault or message on the system. Pressing the blue Reset button to the right will clear these messages if the source of the fault has been remedied. When no faults are present, this box will disappear and a Quadrel Logo and Recipe summary will be displayed.

**System Run Mode:**
The conveyor and all enabled motors can be stopped and started using this button.

<u>Green "Start" Button:</u> Pressing this button will start the system (assuming no fatal faults are present on the system.

<u>Red "Stop" Button:</u> Pressing this button will stop the system.

**Labeler Run/Stop:**
The Labeler can be toggled between Run and Stop (pending fault conditions). The Run/Stop button will change colors and text based on the current status.

<u>Green "Running" Button:</u> This indicates the labeler is currently running and cannot be jogged. While running, the labeler will automatically apply labels to passing products. To **stop** the labeler, press this button.

<u>Red "Stopped" Button:</u> This indicates the labeler is currently stopped and may be jogged. While stopped, the labeler will ignore products passing by. To **run** the labeler, press this button.

**Product Rate (Parts Per Minute):**
This indicator will reflect how many parts per minute are passing by the product detect sensor. This number will start being calculated after 5 products pass and will continue to average out until no product is detected for 30 seconds.

**Target Speed:**
The target speed of the conveyor will be entered here as Inches per Minute.

## Main Screen for Single Labeler system:

After touching the splash screen, the touch screen will display the Main screen. You can also get to the Main screen by pressing the Home icon (pictured left).

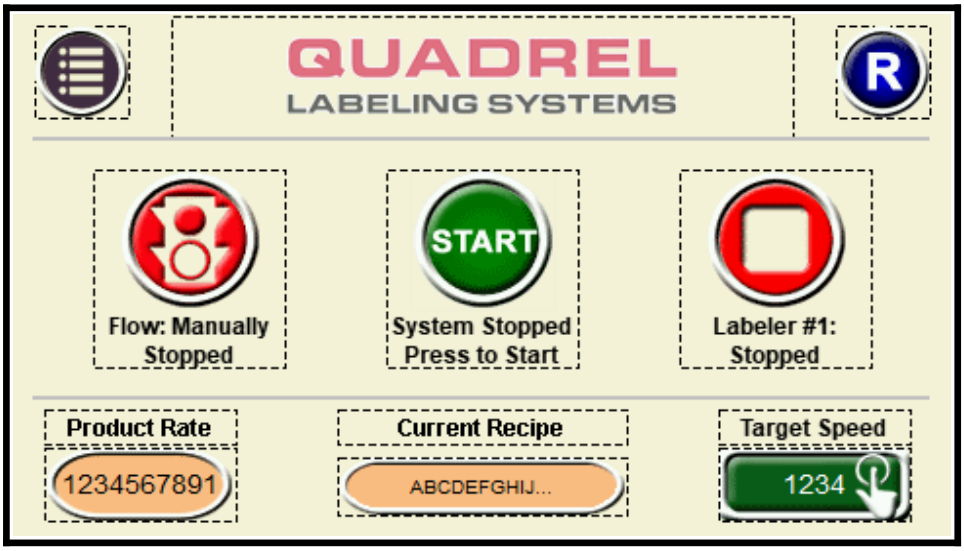


Instead of a Run/Stop toggle for Labeler #2, the main screens for Single Labeler systems will contain a Product Flow button.

**Product Flow Control:**
The product flow / pacing system can be stopped independently of the main system in order to prevent products from flowing into the system. This can be useful during setup or to purge the system. A pacing system can be a pacing wheel, pacing belt, or stop gate.

<u>Green "Automatic" Button:</u> This indicates the pacing system will stop and start the pacing system based on external conditions.

<u>The Pacing System will stop/close when:</u>

- The system is stopped
- The infeed sensor is not blocked by products or "starved".
- The outfeed sensor is blocked by products or "full".
- The Product Flow button has been toggled to "Manually Stopped"

<u>Red "Manually Stopped" Button:</u> This indicates the pacing system is stopped and will not allow products into the system until toggled back to Automatic.

## System Menus:

After touching the button to the left from the Main screen, the actual menu will vary based on actual Machine Type. All sub menu descriptions and buttons will be listed below.

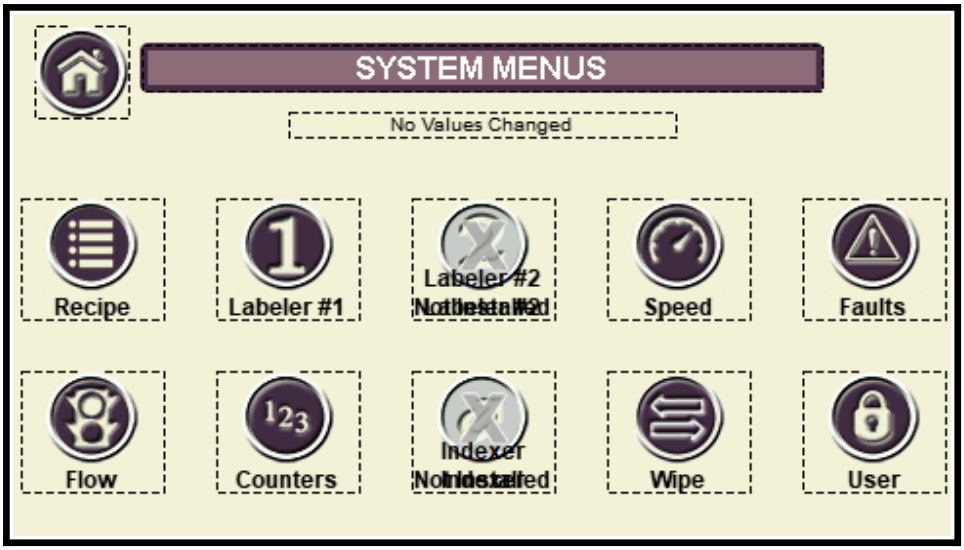


**Menu buttons may be unavailable if that option is not installed or configured.**

**Main Menu:**
Press this to return to the Main Menu.

**Recipe Menu:**
The system can store 9 recipes. The Recipe Menu allows saving, copying, and changing the description.

**Labeler #1 Menu:**
The Labeler Menu contains the parameters associated with dispensing labels onto products.

**Labeler #2 Menu:**
The Labeler Menu contains the parameters associated with dispensing labels onto products.

**System Speed:**
The System Speed menu will have all of the parameters and toggles related to the various motors on the machine.

**Fault Menu:**
The Fault Menu has a larger fault window to show all active fault messages on the system. Stepper Drive diagnostics can also be accessed from this menu.

**Flow Menu:**
The timers associated with the Product Flow / Pacing System will be in this menu.

**Counters Menu:**
The Product and Label Counts can be viewed and reset in the Counters Menu.

**Three Roller Indexer Menu:**
An optional three roller indexing module can be controlled in this menu.

**Wipe Menu:**
The Wipe Menu contains the toggle and parameters associated with controlling a wipe cylinder, typically used in trailing panel applications.

**User Menu:**
The User Menu allows an operator to log in at different levels to change protected parameters and toggles.

## Recipe Menu:

The Recipe Menu allows the user to change recipes, view all recipes by descriptions, save recipes, and save recipes as new.

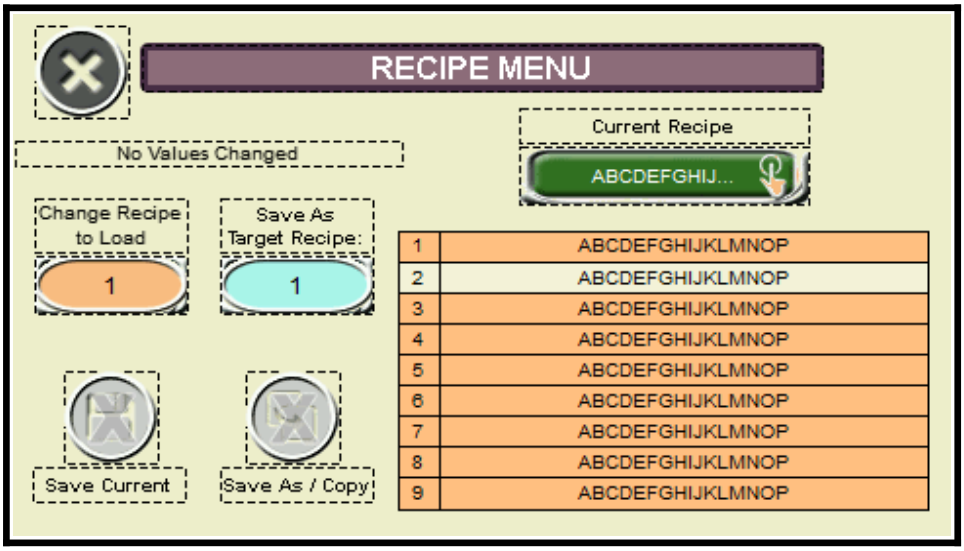


**Recipe:**
Recipes are presets that contain parameters unique to each product. Setting Recipes for different products expedites changeover times. A total of 9 recipes can be stored and descriptions can be changed by pressing the bottom description box when logged in at a Supervisor Level.
Recipes store the following information:
Description (displayed in the list on the center of the screen)
Speed Parameters: Target Speed, All Motor Enables, Wrap Ratio
Labeler Parameters: Product Delay, Label Stop, Max Feed, Dispense Speed / Dispense Ratio
Wipe Parameters: Wipe Enable, Wipe Delay, Wipe Duration
Roller Parameters: Escapement Delay, Escapement Duration, Capture Delay, Capture Settle Time, Registration Offset

**Loading:**
Recipes can be loaded by entering a new Recipe number on the left side. Once entered, all stored toggles and parameters will be loaded to the system. If a new recipe is loaded it can trigger the save button to appear in the event the system loaded default/non-zero values to various toggles and parameters.

**Saving**:
Pressing the purple Save button in the bottom center will save all current recipe parameters to the current Recipe number.

**Save As Target Recipe** (Supervisor Level):
This number can be used to create a copy of the current recipe when using the Save As button.

**Save As** (Supervisor Level):
Pressing the pink Save As button in the bottom left will save all current recipe parameters to the Save As Recipe number. Note that this button does not save the current values to the current recipe.

**Change Description** (Supervisor Level):
Pressing the Recipe Description at the top will bring up a keyboard that allows the user to enter a new description for the current recipe.

## Labeler Menu:

After touching the button to the left from the Menus screen, the following screen appears. Note that the fault display will still appear over the title bar if the system has an active fault.

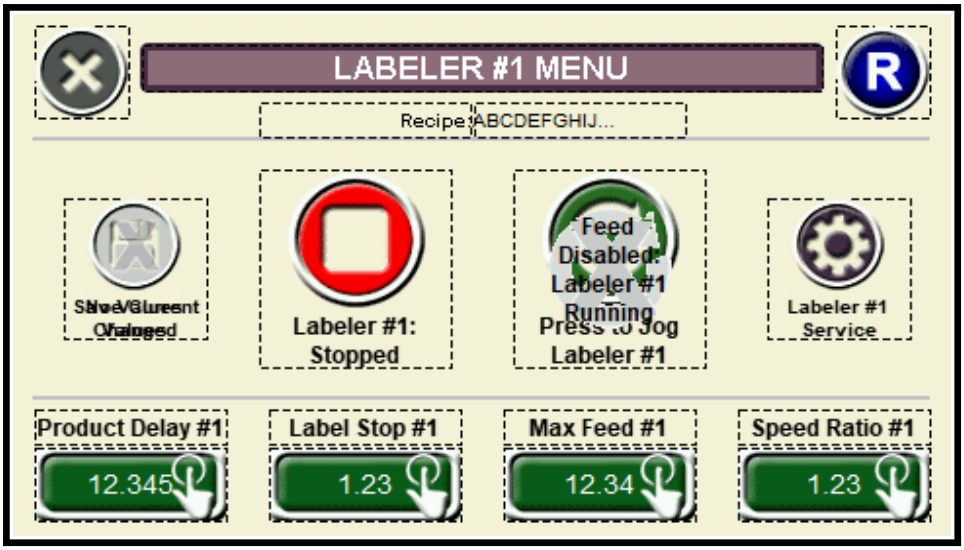


**Close / Back:**
Press this to return to the previous screen.

**Labeler Service Menu:**
The Labeler Setup Menu contains core values related to the dispensing speed of the labeler. These are typically set up at the factory and don't need further adjustment.

**Labeler Run/Stop:**
The Labeler can be toggled between Run and Stop (pending fault conditions). The Run/Stop button will change colors and text based on the current status.

Green "Running" Button: This indicates the labeler is currently running and cannot be jogged. While running, the labeler will automatically apply labels to passing products. To **stop** the labeler, press this button.

Red "Stopped" Button: This indicates the labeler is currently stopped and may be jogged. While stopped, the labeler will ignore products passing by. To **run** the labeler, press this button.

**Labeler Jog:**
When the Labeler is stopped, the Jog button becomes available. Pressing the Jog button will cause the labeler to dispense one label (pending proper threading and label gap detection). It is important to jog labels upon threading or changing over to verify the labeler is threaded and functioning properly.

Green "Jog" Button: This indicates the labeler can be jogged. Press this button to start a jog process. This button will be grey while the labeler is jogging.

Greyed out "Jog" Button: This indicates the labeler is currently running, and may not be manually jogged.

**Product Delay:**
The Product Delay is used to center the label on the product in the left/right direction. A higher value in the Product Delay parameter will move the label towards the infeed side of the conveyor.
The Product Delay value is entered as inches.

**Label Stop:**
The Label Stop controls the label's stop position. Typically the label should stop with 1/8" to ¼" sticking off of the peel plate. A higher Label Stop will result in more label off of the peel plate. The Label Stop value is entered as inches.

**Max Feed Length:**
The Max Feed controls how much liner (in inches) will be dispensed in the event no label gap is found. This is to prevent label runaway conditions and can be used to determine if labels are missing on the liner.
After a label is set up properly, this value can be set to the label length + .25.
When setting up a new label, it may be necessary to set this value to 2x the actual label length. This will allow the labeler to dispense more label to find and process the label stop value.

**Speed Ratio:**
This is a speed ratio based on the target speed of the conveyor that determines the dispensing speed of the labeler. A value of 1.00 means the labeler will dispense at the target conveyor speed.

**Saving:**
When any of the stored recipe values are changed, the Save button will appear. The Save button must be pressed to save settings to the current recipe.
The text above any parameter will flash if it has been changed.

## Labeler Service Menu:

After touching the button to the left from the Labeler Menu, the following screen appears.

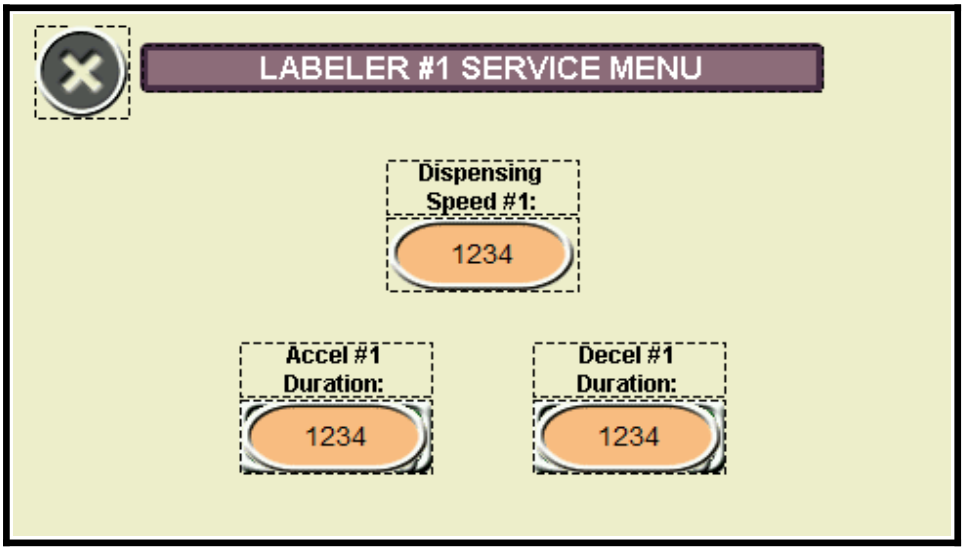


**Close / Back:**
Press this to return to the previous screen.

**Dispensing Speed:**
This indicator reflects the current dispensing speed of the labeling head in inches per minute. It is calculated by Target Speed x Speed Ratio.

**Accel (Supervisor Level):**
The Accel Duration (entered in milliseconds x 10) is the rate at which the label will reach the target dispensing speed. Too low of a value may result in motor stalling or liner tears. Too high of a value may result in the label not being dispensed in time to reach production rates.

**Decel (Supervisor Level):**
The Decel Duration (entered in milliseconds x 10) is the rate at which the label will come to a stop. Too low of a value may result in problems attempting to label the next product. Too high of a value may result in erratic label stop.

## System Speed Menu:

After touching the button to the left from the System Menu screen, the following screen appears.

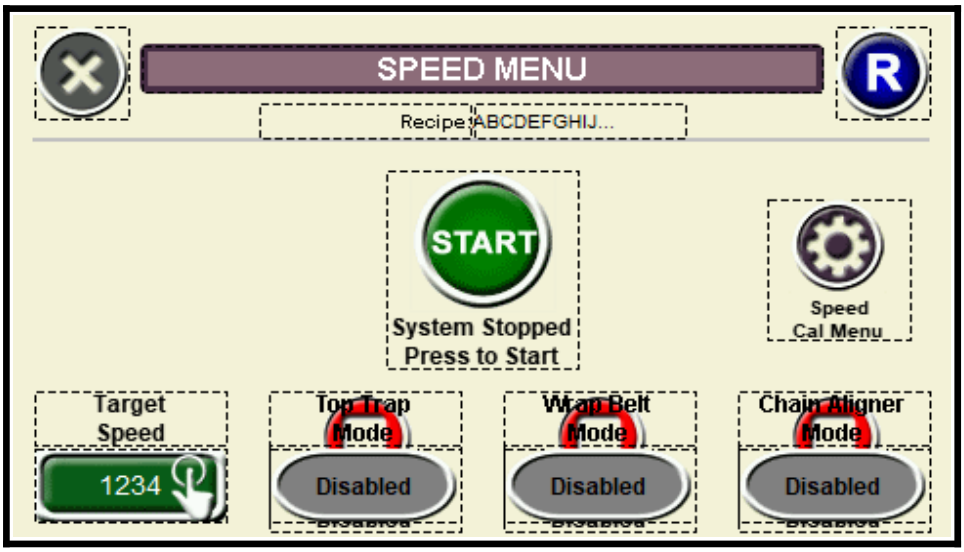


**Close / Back:**
Press this to return to the previous screen.

**Target Speed:**
The Target Speed entry box changes the speed of the system. It will be entered as inches per minute (200-1600).

**Top Trap (Supervisor Level):**
The Top Trap is a belt that touches the top of the product and keeps it contained throughout the labeling process.

**Wrap Belt (Supervisor Level):**
The Wrap Belt is mounted to the conveyor and is used to wipe down the label on round products. The Wrap Belt can be mounted directly at the labeling head (called a Direct Wrap application) or past the Top Trap (called a Flag and Wrap application).

**Chain Aligners (Supervisor Level):**
Chain Aligners are spring loaded belts that are used for centering non-squared (typically oval shaped) containers before they enter the top trap.

## System Speed Calibration Menu:

After touching the button to the left from the System Menu screen, the following screen appears.

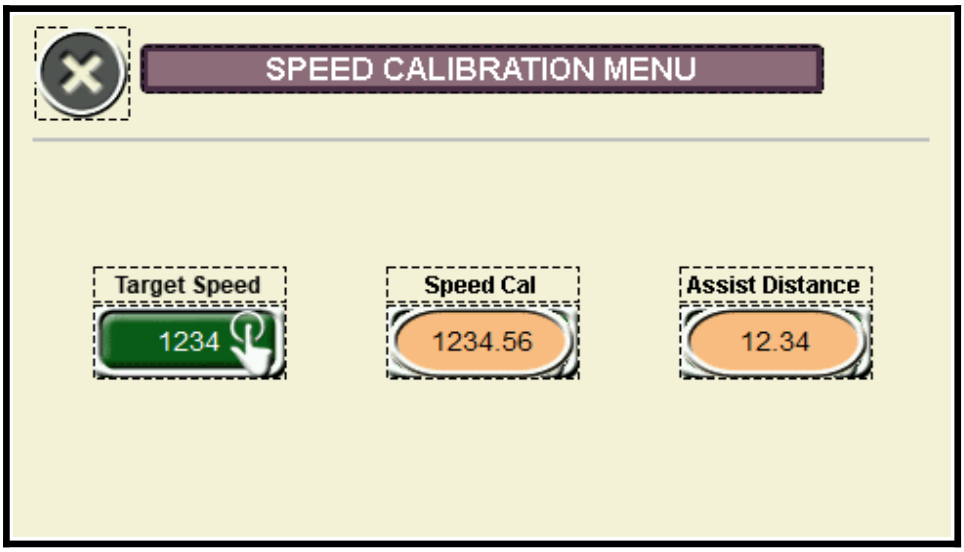


**Close / Back:**
Press this to return to the previous screen.

**Target Speed:**
The Target Speed entry box changes the speed of the system. It will be entered as inches per minute (200-1600).

**Speed Calibration (Supervisor Level):**
This value allows the conveyor to run at the target speed. This value is calculated at the factory using a tachometer and should not need adjustment unless drive parameters are changed.

**Air Assist Distance (Maintenance Level):**
If the Top Trap and Wrap are both enabled, it's assumed the system is in a flag & wrap setup. When Labeler #1 dispenses a label in a flag & wrap setup, the air assist tube will turn on for a distance in inches equal to the Air Assist Distance.

## Product Flow Menu:

After touching the button to the left from the System Menu screen, the following screen appears. Note that the fault display will still appear over the title bar if the system has an active fault.

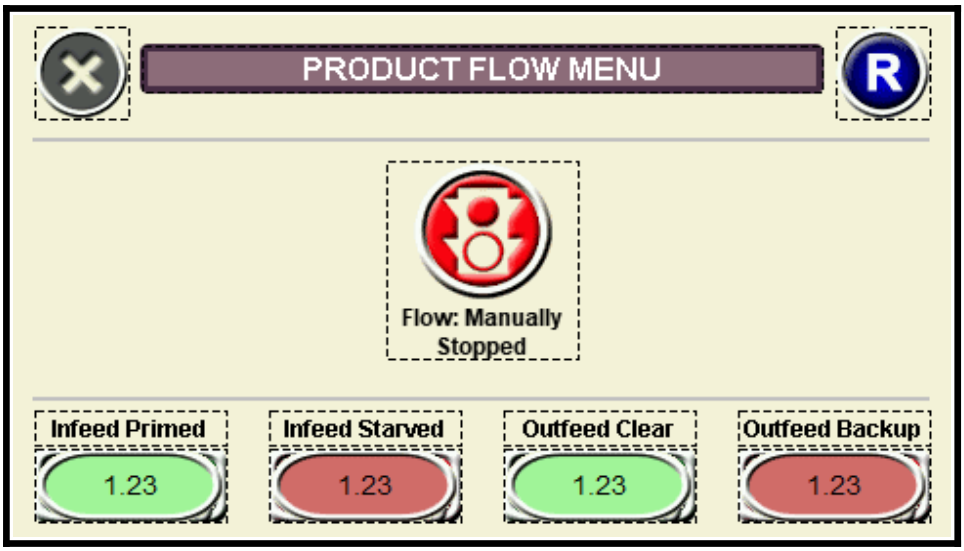


**Close / Back:**
Press this to return to the previous screen.

**Product Flow Mode:**
The Pacing motor or Stop Gate (optional), and bank sensors (optional) will function together to allow smooth product flow into the system. They are also used to prevent products from entering the system when certain conditions are not met.

Green "Automatic" Button: This indicates the installed devices will start/stop or open/close when certain conditions are met. Conditions that stop the product flow are displayed in the fault menu.

Red "Manually Stopped" Button: This indicates the product flow system is stopped and will now allow products to enter until toggled to "Automatic".

The Product Flow stop/close when:

- The system is stopped
- The infeed sensor is not blocked by products: empty/starved.
- The outfeed sensor is blocked by products: full/backed up.
- The Product Flow button has been toggled to "Manually Stopped"

**Status Indicator:**
The indicator below the Flow Mode button reflects the status of the flow system.
Red: Manually Stopped. The Flow Mode is in the manually stopped state and will not allow products to enter.
Yellow: Waiting. The flow system is not allowing products to enter the system due to a condition mentioned above not being met.
Green: Running/Open. Products are currently entering the system.

**Infeed Starved Delay (Maintenance Level):**
This timer will start when the Infeed sensor does NOT see products, which results in an Empty/Starved condition. After this timer expires, the product flow will stop.

**Infeed Primed Delay (Maintenance Level):**
This timer will start when the Infeed sensor sees products, which results in a Primed/Full condition. After this timer expires, the product flow will start.

**Outfeed Clear Delay (Maintenance Level):**
This timer will start when the Outfeed sensor does NOT see products, which results in a Clear/Empty condition. After this timer expires, the product flow will start.

**Outfeed Full Delay (Maintenance Level):**
This timer will start when the Outfeed sensor sees products, which results in a Backed Up/Full condition. After this timer expires, the product flow will stop.

## Three Roller Indexer Menu:

After touching the button to the left from the System Menu screen, the following screen appears.

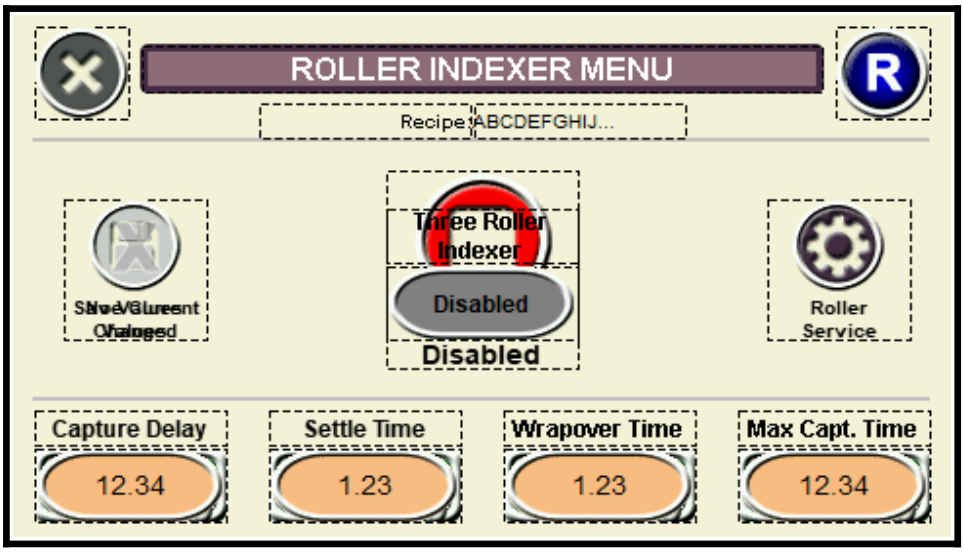


**Close / Back:**
Press this to return to the previous screen.

**Three Roller Mode (Supervisor Level):**
The system can utilize a roller indexing station to trap products and dispense labels based on an optional registration mark.

Enabled: The system will use an escapement to allow products through the system. After exiting the escapement, the roller will extend and capture the product against the wrap belt. While captured, a registration sensor may be monitored to determine when the label is dispensed.

Disabled: The Roller and Escapement will not function.

**Capture Delay (Maintenance Level):**
After a product passes the product detect sensor, this is the distance (in inches) until the roller extends to capture a product.

**Settle Delay (Maintenance Level):**
When the Roller extends, this timer will start (entered in seconds). After this timer expires, the registration sensor will be monitored or label will be dispensed. This timer is used to make sure the product is properly captured before monitoring the registration sensor. Note that the settle timer starts once the roller solenoid is energized.

**Wrapover Time (Maintenance Level):**
After the label is dispensed, the Wrapover timer (entered in seconds) begins. After this timer expires, the Roller station will retract and release the product.

**Maximum Capture Tim (Maintenance Level):**
This timer is used to monitor the overall process. If this timer (in seconds) expires prior to a product being released, a fault will occur.

## Three Roller Indexer Setup Menu:

After touching the button to the left from the Roller Indexer Menu screen, the following screen appears.

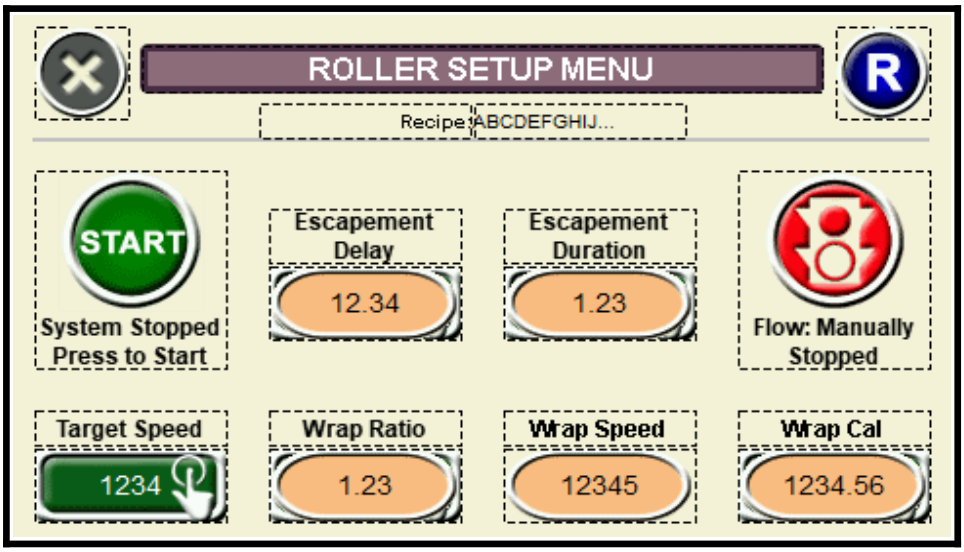


**Close / Back:**
Press this to return to the previous screen.

**Target Speed:**
The Target Speed entry box changes the speed of the system. It will be entered as inches per minute (200-1600).

**Escapement Delay (Maintenance Level):**
When the Escapement Sensor is blocked and system is running, this timer (in seconds) will start. Once the timer expires, the escapement will activate to release a product.

**Escapement Duration (Maintenance Level):**
When the Escapement becomes active to release a product, this timer (in seconds) will start. Once the timer expires, the escapement will deactivate. This timer should be set so the escapement properly releases a product.

**Wrap Speed Ratio (Maintenance Level):**
This entry box determines the speed of the Wrap Belt. It is a speed ratio compared to the Target Conveyor Speed.

**Target Wrap Speed:**
This display will show the target wrap speed in Inches per minute. It is calculated by Target Conveyor Speed x Wrap Ratio.

**Wrap Calibration (Supervisor Level):**
This value allows the wrap to run at the target speed. This value is calculated at the factory using a tachometer and should not need adjustment unless drive parameters are changed.

## Wipe Menu:

After touching the button to the left from the System Menu screen, the following screen appears. Note that the fault display will still appear over the title bar if the system has an active fault.

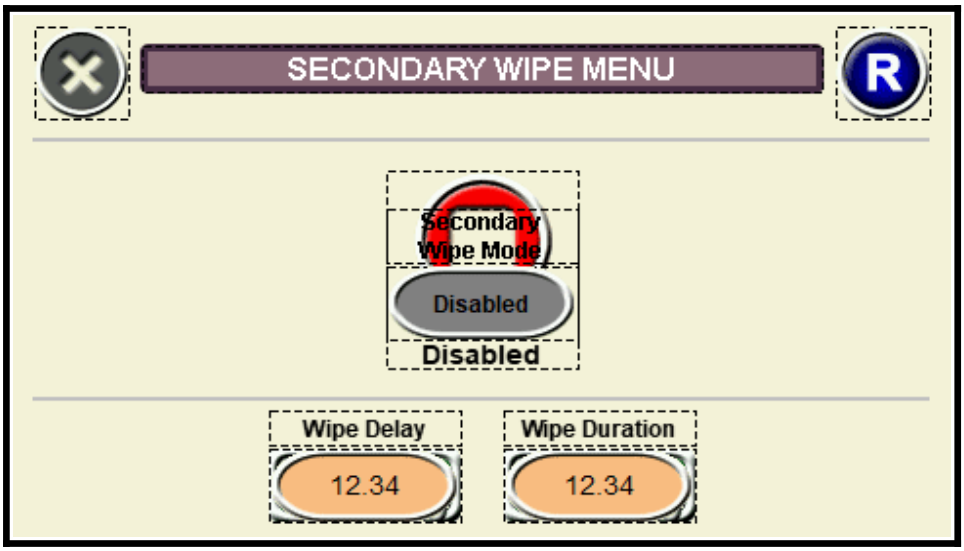


**Close / Back:**
Press this to return to the previous screen.

**Secondary Wipe (Supervisor Level):**
The system can control a secondary wipe cylinder that uses its own trigger sensor and delay settings. This is common in Trailing Panel applications, but could be used for other applications if needed.
The secondary wipe function is a single action event in one signal = one wipe. If the trigger is activated again prior to the wipe extending & retracting that signal is ignored.

<u>Enabled:</u> This indicates the wipe function is enabled. After the trigger sensor is activated, the system will wait for a specified amount of time (Wipe Delay) before energizing the output for the wipe cylinder or device. Note that the output will not energize if the Labeler is stopped.

<u>Disabled:</u> The output for the cylinder or device will not turn on.

**Wipe Delay (Maintenance Level):**
The Wipe Delay (entered in Seconds) is how long the system waits from the trigger sensor being activated until the output for the cylinder or device is turned on.

**Wipe Duration (Maintenance Level):**
The Wipe Duration (entered in Seconds) is how long the output remains on once it is activated.

## Counters Menu:

Product and Label Counters can be viewed and reset here.

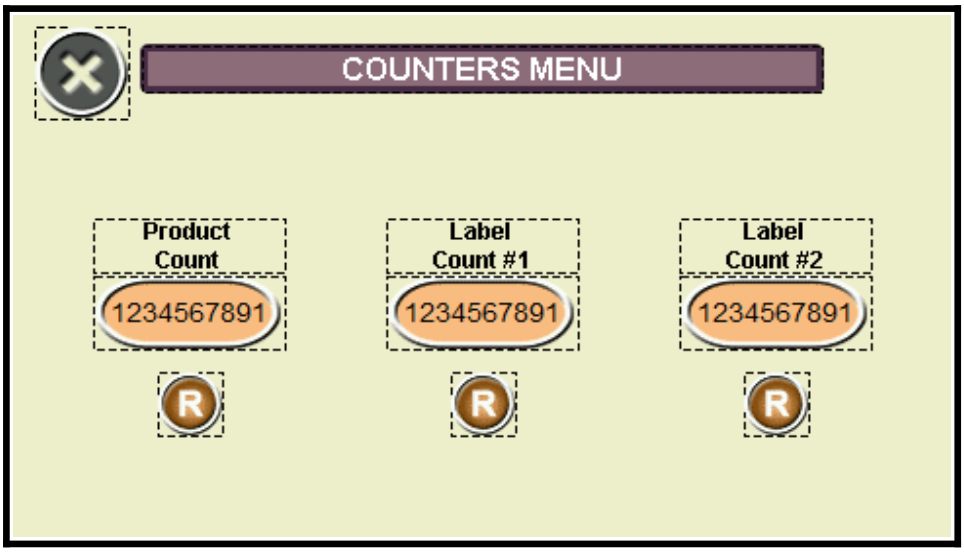


**Close / Back:**
Press this to return to the previous screen.

**Product Count and Reset:**
This counter reflects how many Products have passed the product detect sensor while any labeler is Running. The reset button below the counter will set this value to 0.

**Label Count and Reset:**
This counter reflects how many Labels have been dispensed when Jogging and Running. The reset button below the counter will set this value to 0.

## User Menu:

Log in, Log Out, and Set Custom Passwords

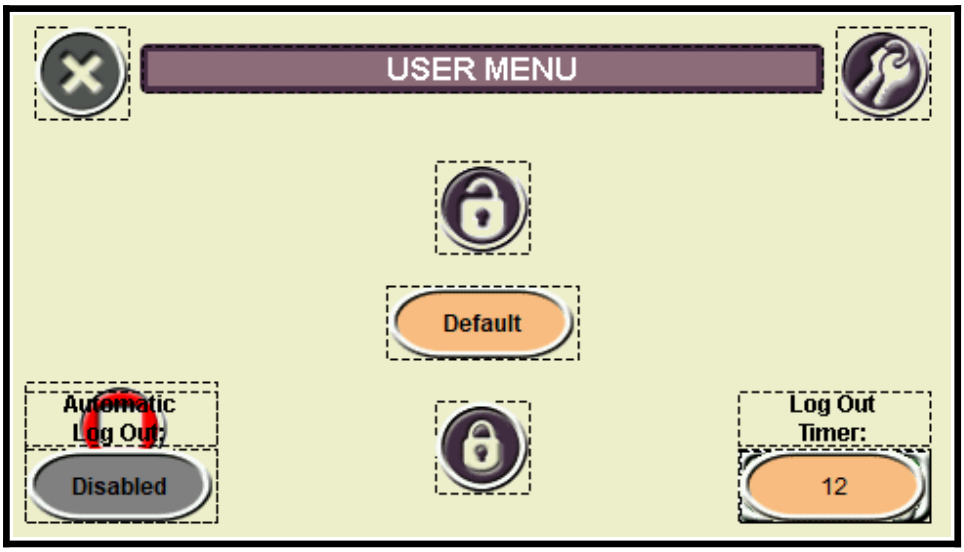


**Close / Back:**
Press this to return to the previous screen.

**Password Input:** Press this button to enter a user password.

**Log Out:** Press this button to enter to log the current user out.

**Password Menu:** This will open up a security prompt before opening the password menu, where the passwords for the Maintenance and Supervisor levels are set.

**Auto Log Out (Supervisor Level):**
When Enabled (button will be Green), the logged in user will automatically be logged off at a set amount of time. Note that the system automatically enables the Auto Log Out feature upon startup.

**Log Out Timer (Supervisor Level):**
This timer (in minutes) determines the time it takes to log off a user if Auto Log Out is enabled.

## Password Menu:

The Password Menu allows the creation and editing of the passwords for different security levels.

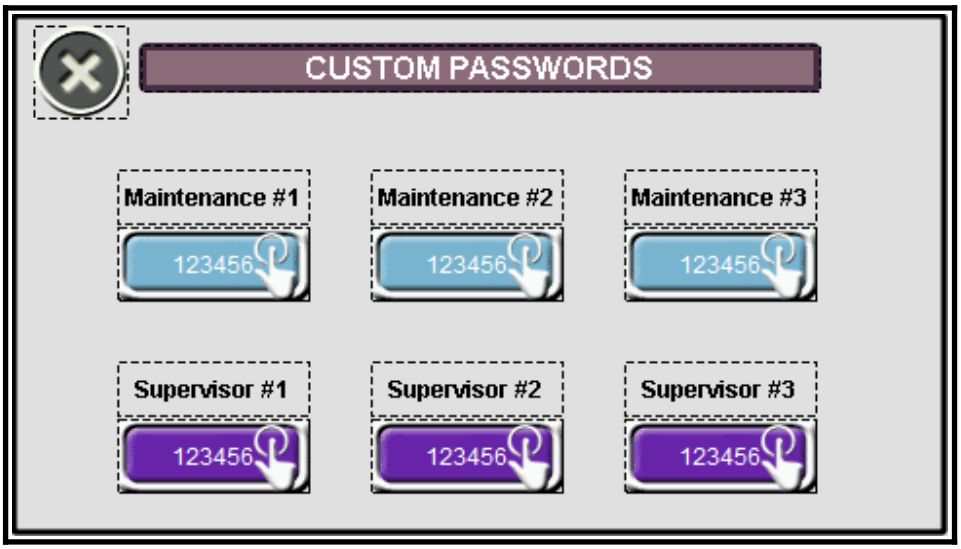


**Maintenance:**
There can be 3 user defined passwords for the Maintenance level. Note that there is one hard coded Maintenance Level password that cannot be viewed or changed.

**Supervisor:**
There can be 3 user defined passwords for the Supervisor level. Note that there is one hard coded Supervisor Level password that cannot be viewed or changed.

If a Maintenance and Supervisor password are the same, the system will log that user in at the Maintenance level.

The password(s) to open the Password Menu are stored in the HMI and cannot be modified. This will prevent any password loss in the event the PLC logic is altered.

## Fault Menu:

The Fault Menu displays all fault messages, shows system level counters, and gives access to a Fault History. You can access this Menu by pressing the Alert icon (pictured left).

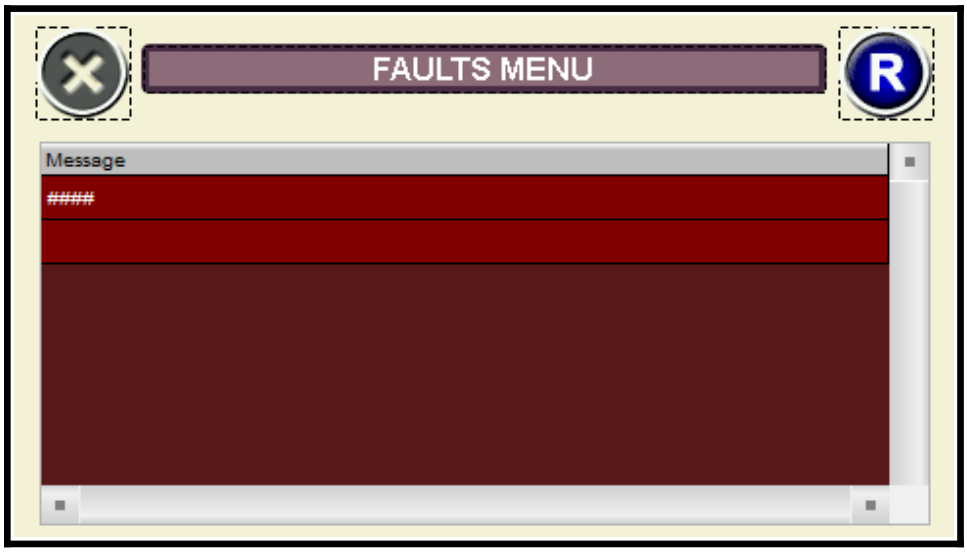


**Fault/Message window:**
The Red box in the middle of the screen will display any active fault or message on the system. Pressing the blue Reset button will clear these messages if the source of the fault has been remedied.
If multiple faults exist, it is necessary to scroll down to view them.

## Fault Messages and Indicators:

Green Lamp (option): A Green lamp will be steady to signal the labeler is free of all faults.

Amber Lamp (option): An Amber lamp will signal that there is a warning condition present on the system. Warning conditions typically allow the system to function normally, but action will be needed soon to replace labels, ribbon, etc. Some warning messages will turn into fatal faults if they are not addressed before taking additional actions.

Red Lamp / Buzzer (option): A Red lamp indicates that a fatal fault occurred and the system is unable to run properly.

| Messages | Cause/Solution |
|---|---|
| **Warning Messages** | |
| **Screen Boot Sequence Warning** | The PLC will not execute it's internal program until the screen starts up. If the PLC powered was cycled but screen was not, this message will appear. Cycle power to the entire labeling head. |
| **Low Label Supply #X** | The label supply on the listed labeler has been determined low by the sensor fiber under the flange. Note that this message will not appear until the labeler is placed in run or is currently running. |
| **End of Web Warning #X** | The End Of Web sensor (between the drive system and unwind) on the listed Labeler is active and the Labeler is Stopped. Placing the Labeler into Run will generate a Fatal Fault. |
| **Broken Web Warning #X** | The Broken Web sensor (between the drive system and rewind) on the listed Labeler is active and the Labeler is Stopped. Placing the Labeler into Run will generate a Fatal Fault. |
| **Missing Label / Max Feed #X** | This message will appear if the drive determined there was no label gap detected when dispensing. Check the Max Feed distance, label sensor, and labels if this frequently occurs. |
| **Infeed Starved / Outfeed Full. Product Flow Stopped** | The Product Flow device is currently stopped because the Infeed area is starved of products and/or the outfeed area is full of products. |
| **Labeler #X Drive Faulted Warning** | The driver that controls the stepping motor on the labeler has been turned off or has become faulted. The warning indicated the labeler is Stopped. Placing the Labeler into Run will generate a Fatal Fault. |
| **Product Delay Warning** | The system attempted to apply a label to a product but was already in a dispensing process. Verify the products are properly spaced and/or increase the Product Delay parameter. |

| **Fatal Messages** | |
|---|---|
| **Safety Fault. Check E-Stops** | An emergency stop is pressed in. When released, the safety circuit will restart, but the fault message must be manually cleared from the HMI. |
| **Labeler #x Drive Faulted / Turned Off** | The driver that controls the stepping motor on the labeler has been turned off or has become faulted. Refer to the stepper drive manual to read fault codes on the drive itself. This fault will become active if the labeler is Running or placed into Run. |
| **Labeler #x Broken Web Fault** | The Broken Web sensor (between the drive system and rewind) on the Labeler is active and the Labeler was Running or placed into Run. |
| **Labeler #x End of Web Fault** | The End Of Web sensor (between the drive system and unwind) on the Labeler is active and the Labeler was Running or placed into Run. |

| Fatal Messages, cont. | |
|---|---|
| **Missing Label / Max Feed #X** | This message will appear if the drive determined there was no label gap detected when dispensing. Check the Max Feed distance, label sensor, and labels if this frequently occurs. |
| **DRx Faulted** | The listed drive did not send data back to the PLC that it is running when the system was started. Check that the drive is powered up, has no faults, and communication cabling is correct. |
| **Movement Error, Press Reset** | The system attempted to dispense a label but could not due to an invalid parameter. Verify that a max feed and dispense speed is set. |
| **Roller Timeout Fault** | The Roller Indexer process timed out. This can be from a Max Capture Time value being set too low, product not being captured properly, or registration feature not detected. |
| **Roller Not Home Fault** | The Roller Indexer was requested to capture a product, but the home sensor on the cylinder was not active. This can be from products being too close, loss of air pressure, faulty home sensor, or cylinder pinching an object like a cable or hose. |

To set user passwords during initial setup navigate to the passwords screen, then Log in using password “7670” Once logged in users can set passwords per HMI Guide.

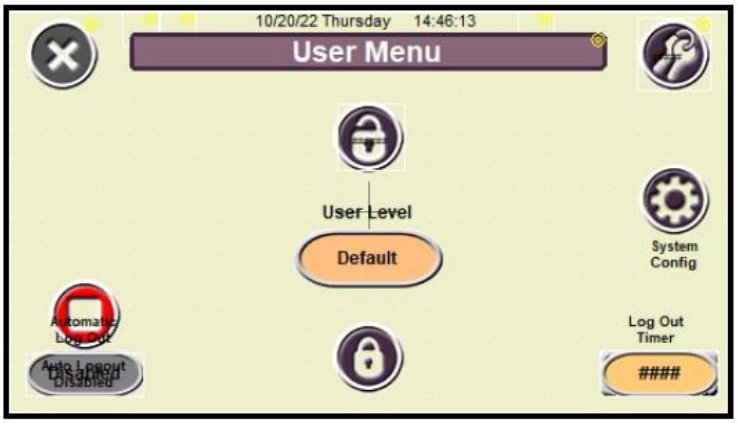


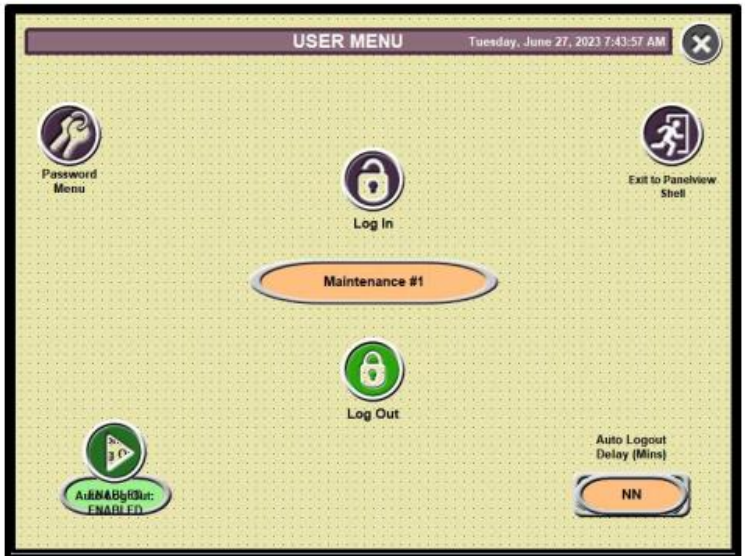

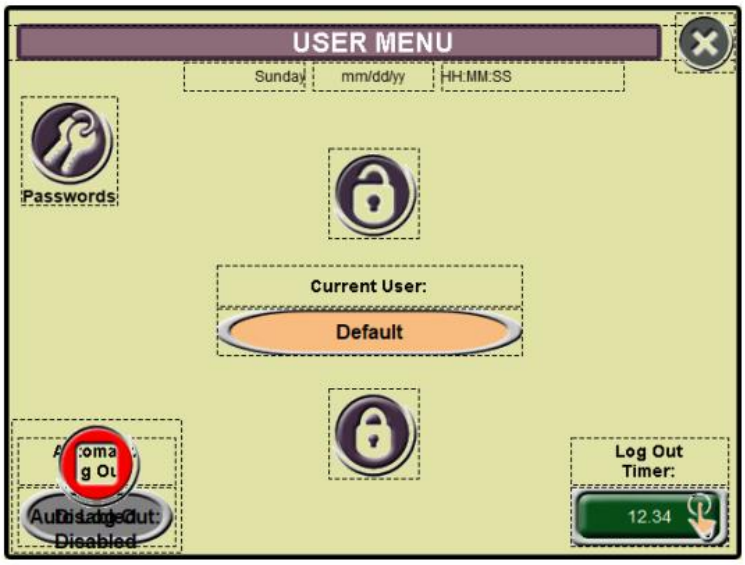
USER MENU
Sunday
mm/dd/yy
HH:MM:SS
Passwords
Current User:
Default
Log Out
Timer:
12.34
Disabled

# Setup Sheets

QUADREL
LABELING SYSTEMS

**Serial Number:** 84237-100

**Label Size: 3.375 x 9.125" Product: 16oz Wrap**

**Pace Speed Pot: 28 12" Pitch= 60 PPM**

## Labeler Menu

| | Labeler #1 | Labeler #2 |
|---|---|---|
| Recipe | **1** | **1** |
| Product Delay | **9.00** | **n/a** |
| Label Stop | **4.00** | **n/a** |
| Max Feed | **10.00** | **n/a** |
| Speed Ratio | **1.00** | **n/a** |

## Setup Menu

| | Labeler #1 | Labeler #2 |
|---|---|---|
| Accel | **250** | **250** |
| Decel | **250** | **250** |

## Speed Menu

| | |
|---|---|
| Target Conveyor Speed | **720** |
| Top Trap | X Enable Disable |
| Wrap Belt | X Enable Disable |
| Chain Aligner | X Enable Disable |

## Speed Calibration Menu

| | |
|---|---|
| Target Conveyor Speed | **720** |
| Conveyor Calibration | **12.00** |
| Air Assist Distance | **32.00** |

QUADREL
LABELING SYSTEMS

## Product Flow Menu

| | |
|---|---|
| Infeed Primed Delay | N/A |
| Infeed Starved Delay | N/A |
| Outfeed Clear Delay | N/A |
| Outfeed Full Delay | N/A |

## Wipe Menu

| | |
|---|---|
| Secondary Wipe | Enable **X** Disable |
| Wipe Delay | N/A |
| Wipe Duration | N/A |

## Mechanical Settings

| | **Labeler#1** | **Labeler #2** |
|---|---|---|
| Labeler Up/Down | **3757** | **n/a** |
| Labeler In/Out | **1088** | **n/a** |
| Top Trap Up/Down | **99687** | |
| Wrap Station Up/Down | **10** | |
| Wrap Station In/Out | **596** | |
| Backup Plate Up/Down | **165** | |
| Backup Plate In/Out | **98740** | |
| Printer Left/Right | | |
| Printer Up/Down | | |

QUADREL
LABELING SYSTEMS

**Serial Number:** 84237-100

**Label Size: 4.88 x 16.88”  Product: Gallon Wrap**

**Pace Speed Pot: 26  20” Pitch= 40 PPM**

## Labeler Menu

| | Labeler #1 | Labeler #2 |
|---|---|---|
| Recipe | **2** | **2** |
| Product Delay | **9.00** | **n/a** |
| Label Stop | **9.25** | **n/a** |
| Max Feed | **20.00** | **n/a** |
| Speed Ratio | **1.00** | **n/a** |

## Setup Menu

| | Labeler #1 | Labeler #2 |
|---|---|---|
| Accel | **250** | **250** |
| Decel | **250** | **250** |

## Speed Menu

| | |
|---|---|
| Target Conveyor Speed | **800** |
| Top Trap | X Enable Disable |
| Wrap Belt | X Enable Disable |
| Chain Aligner | X Enable Disable |

## Speed Calibration Menu

| | |
|---|---|
| Target Conveyor Speed | **800** |
| Conveyor Calibration | **12.00** |
| Air Assist Distance | **32.00** |

QUADREL
LABELING SYSTEMS

## Product Flow Menu

| | |
|---|---|
| Infeed Primed Delay | N/A |
| Infeed Starved Delay | N/A |
| Outfeed Clear Delay | N/A |
| Outfeed Full Delay | N/A |

## Wipe Menu

| | |
|---|---|
| Secondary Wipe | Enable **X** Disable |
| Wipe Delay | N/A |
| Wipe Duration | N/A |

## Mechanical Settings

| | **Labeler#1** | **Labeler #2** |
|---|---|---|
| Labeler Up/Down | **3125** | **n/a** |
| Labeler In/Out | **298** | **n/a** |
| Top Trap Up/Down | **96210** | |
| Wrap Station Up/Down | **47** | |
| Wrap Station In/Out | **1322** | |
| Backup Plate Up/Down | **194** | |
| Backup Plate In/Out | **99667** | |
| Printer Left/Right | | |
| Printer Up/Down | | |

QUADREL
LABELING SYSTEMS

**Serial Number:** 84237-100

**Label Size: 3.75" x 2.75" Product: 16oz Oval Side Panel**

**Pace Speed Pot:**

## Labeler Menu

| | Labeler #1 | Labeler #2 |
|---|---|---|
| Recipe | **3** | **3** |
| Product Delay | **n/a** | **9.00** |
| Label Stop | **n/a** | **1.00** |
| Max Feed | **n/a** | **10.00** |
| Speed Ratio | **n/a** | **1.00** |

## Setup Menu

| | Labeler #1 | Labeler #2 |
|---|---|---|
| Accel | **250** | **250** |
| Decel | **250** | **250** |

## Speed Menu

| | |
|---|---|
| Target Conveyor Speed | **600** |
| Top Trap | X Enable Disable |
| Wrap Belt | Enable X Disable |
| Chain Aligner | X Enable Disable |

## Speed Calibration Menu

| | |
|---|---|
| Target Conveyor Speed | **600** |
| Conveyor Calibration | **12.00** |
| Air Assist Distance | **28.00** |

QUADREL
LABELING SYSTEMS

## Product Flow Menu

| | |
|---|---|
| Infeed Primed Delay | N/A |
| Infeed Starved Delay | N/A |
| Outfeed Clear Delay | N/A |
| Outfeed Full Delay | N/A |

## Wipe Menu

| | |
|---|---|
| Secondary Wipe | Enable **X** Disable |
| Wipe Delay | N/A |
| Wipe Duration | N/A |

## Mechanical Settings

| | **Labeler#1** | **Labeler #2** |
|---|---|---|
| Labeler Up/Down | **n/a** | **3506** |
| Labeler In/Out | **n/a** | **1866** |
| Top Trap Up/Down | **98605** | |
| Wrap Station Up/Down | **n/a** | |
| Wrap Station In/Out | **n/a** | |
| Backup Plate Up/Down | **n/a** | |
| Backup Plate In/Out | **n/a** | |
| Printer Left/Right | **n/a** | |
| Printer Up/Down | **n/a** | |

**Fuji Frenic Mini** v.011

For use with Econolines with Keyence Nano PLC & Delta HMI

Job: 84237 Drive: DR1 Motor: Conveyor

**SETUP AND ADJUSTMENTS:** (Reference Fuji drive manual for detailed information)

**Set Primary Parameters:**

| Parameter | Fuji Default | Quadrel Default Value | Quadrel Final Value | Description |
|---|---|---|---|---|
| F01 | 4 | 0 (Keypad) | 1 ✓ | Freq. Command |
| F02 | 2 | 1 (Terminals) | 1 ✓ | Operation |
| F03* | 60.0 | 60.0 | 90.0 | Max Frequency |
| F07 | 6.0 | 3.0 | 3.0 | Accel Time |
| F08 | 6.0 | 3.0 | 3.0 | Decel Time |
| F15 | 70 | 70 | 90.0 | Frequency Limit |
| F42 | 0 | 2 | 2 ✓ | Control Mode |
| H30** | 0 | 1 | 1 ✓ | Comm Function |
| E27 | 99 | 0 | 0 ✓ | Relay Function |
| P99 | 0 | 1 (HP) | 1 ✓ | Motor Type |
| P02 | Varies | See Motor Nameplate | .38 | Rated Capacity (HP) |
| Y01*** | 1 | 1 | ✓1 (Conveyor Only) | Drive Address |
| Y10 | 1 | 2 | 2 ✓ | Protocol |

***: If F03 needs to be greater than 70.0 (F15 Default), F15 must be changed first.**
****: 1 for Conveyor or Three Roller Wrap. 0 for all others.**
*****: 1 for Conveyor, 2 for Three Roller Wrap**
**P02 Reference for frequently used motors:**
**3/8 HP: 0.38, 1/6 HP: 0.17**

**Initialize Parameters**

- **Navigate to Parameter H03**
- **Use the STOP and UP Arrow to change H03 to "2". Press the Func/Data button.**
- **"Save" will flash on the display. H03 will revert back to "0" once the parameters are automatically set.**

**Set the Motor Current based on the Motor Nameplate value. Entered as Amps.**

| Parameter | Fuji Default | Motor Nameplate | Quadrel Final value |
|---|---|---|---|
| P03 | Varies | 1.9 | 1.9 |

**P03 Reference for frequently used motors:**
**3/8 HP: 1.9, 1/6 HP: 0.73**

**S03 Jumper Setting:**
**Default is in the OFF position.**
**Standard Systems: Set DR1 Conveyor to ON position. Other drives set to default/OFF.**
**Three Roller Systems: Set Wrap drive to ON position. Other drives set to default/OFF.**

**SINK/SOURCE Jumper Setting: SOURCE (All Drives)**

**Fuji Frenic Mini** v.011

For use with Econolines with Keyence Nano PLC & Delta HMI

**Job:** 84237 **Drive:** DR2 **Motor:** Top Trap

**SETUP AND ADJUSTMENTS:** (Reference Fuji drive manual for detailed information)

**Set Primary Parameters:**

| Parameter | Fuji Default | Quadrel Default Value | Quadrel Final Value | Description |
|---|---|---|---|---|
| F01 | 4 | 0 (Keypad) | 1 ✓ | Freq. Command |
| F02 | 2 | 1 (Terminals) | 1 ✓ | Operation |
| F03* | 60.0 | 60.0 | 92.0 | Max Frequency |
| F07 | 6.0 | 3.0 | 3.0 | Accel Time |
| F08 | 6.0 | 3.0 | 3.0 | Decel Time |
| F15 | 70 | 70 | 94.0 | Frequency Limit |
| F42 | 0 | 2 | 2 ✓ | Control Mode |
| H30** | 0 | 1 | ~~1~~ 0 | Comm Function |
| E27 | 99 | 0 | 0 ✓ | Relay Function |
| P99 | 0 | 1 (HP) | 1 ✓ | Motor Type |
| P02 | Varies | See Motor Nameplate | .38 | Rated Capacity (HP) |
| Y01*** | 1 | 1 | ✓1 (Conveyor Only) | Drive Address |
| Y10 | 1 | 2 | 2 ✓ | Protocol |

***: If F03 needs to be greater than 70.0 (F15 Default), F15 must be changed first.**
****: 1 for Conveyor or Three Roller Wrap. 0 for all others.**
*****: 1 for Conveyor, 2 for Three Roller Wrap**
**P02 Reference for frequently used motors:**
**3/8 HP: 0.38, 1/6 HP: 0.17**

**Initialize Parameters**

- **Navigate to Parameter H03**
- **Use the STOP and UP Arrow to change H03 to "2". Press the Func/Data button.**
- **"Save" will flash on the display. H03 will revert back to "0" once the parameters are automatically set.**

**Set the Motor Current based on the Motor Nameplate value. Entered as Amps.**

| Parameter | Fuji Default | Motor Nameplate | Quadrel Final value |
|---|---|---|---|
| P03 | Varies | 1.9 | 1.9 |

**P03 Reference for frequently used motors:**
**3/8 HP: 1.9, 1/6 HP: 0.73**

**S03 Jumper Setting:**
**Default is in the OFF position.**
**Standard Systems: Set DR1 Conveyor to ON position. Other drives set to default/OFF.**
**Three Roller Systems: Set Wrap drive to ON position. Other drives set to default/OFF.**

**SINK/SOURCE Jumper Setting: SOURCE (All Drives)**

**Fuji Frenic Mini** v.011

For use with Econolines with Keyence Nano PLC & Delta HMI

**Job:** 84237 **Drive:** DR3 **Motor:** Wrap

**SETUP AND ADJUSTMENTS:** (Reference Fuji drive manual for detailed information)

**Set Primary Parameters:**

| Parameter | Fuji Default | Quadrel Default Value | Quadrel Final Value | Description |
|---|---|---|---|---|
| **F01** | 4 | 0 (Keypad) | 1 ✓ | Freq. Command |
| **F02** | 2 | 1 (Terminals) | 1 ✓ | Operation |
| **F03*** | 60.0 | 60.0 | 70.0 | Max Frequency |
| **F07** | 6.0 | 3.0 | 3.0 | Accel Time |
| **F08** | 6.0 | 3.0 | 3.0 | Decel Time |
| **F15** | 70 | 70 | 90.0 | Frequency Limit |
| **F42** | 0 | 2 | 2 ✓ | Control Mode |
| **H30**** | 0 | 1 | ~~1~~ 0 | Comm Function |
| **E27** | 99 | 0 | 0 ✓ | Relay Function |
| **P99** | 0 | 1 (HP) | 1 ✓ | Motor Type |
| **P02** | Varies | See Motor Nameplate | .38 | Rated Capacity (HP) |
| **Y01***** | 1 | 1 | 1 (Conveyor Only) | Drive Address |
| **Y10** | 1 | 2 | 2 ✓ | Protocol |

***: If F03 needs to be greater than 70.0 (F15 Default), F15 must be changed first.**
****: 1 for Conveyor or Three Roller Wrap. 0 for all others.**
*****: 1 for Conveyor, 2 for Three Roller Wrap**
**P02 Reference for frequently used motors:**
**3/8 HP: 0.38, 1/6 HP: 0.17**

**Initialize Parameters**

- **Navigate to Parameter H03**
- **Use the STOP and UP Arrow to change H03 to "2". Press the Func/Data button.**
- **"Save" will flash on the display. H03 will revert back to "0" once the parameters are automatically set.**

**Set the Motor Current based on the Motor Nameplate value. Entered as Amps.**

| Parameter | Fuji Default | Motor Nameplate | Quadrel Final value |
|---|---|---|---|
| **P03** | Varies | 1.9 | 1.9 |

**P03 Reference for frequently used motors:**
**3/8 HP: 1.9, 1/6 HP: 0.73**

**S03 Jumper Setting:**
**Default is in the OFF position.**
**Standard Systems: Set DR1 Conveyor to ON position. Other drives set to default/OFF.**
**Three Roller Systems: Set Wrap drive to ON position. Other drives set to default/OFF.**

**SINK/SOURCE Jumper Setting: SOURCE (All Drives)**

**Fuji Frenic Mini** v.011

For use with Econolines with Keyence Nano PLC & Delta HMI

**Job:** 84237 **Drive:** DR4 **Motor:** Chains

**SETUP AND ADJUSTMENTS:** (Reference Fuji drive manual for detailed information)

**Set Primary Parameters:**

| Parameter | Fuji Default | Quadrel Default Value | Quadrel Final Value | Description |
|---|---|---|---|---|
| F01 | 4 | 0 (Keypad) | 1 ✓ | Freq. Command |
| F02 | 2 | 1 (Terminals) | 1 ✓ | Operation |
| F03* | 60.0 | 60.0 | 115.0 | Max Frequency |
| F07 | 6.0 | 3.0 | 3.0 | Accel Time |
| F08 | 6.0 | 3.0 | 3.0 | Decel Time |
| F15 | 70 | 70 | 125.00 | Frequency Limit |
| F42 | 0 | 2 | 2 ✓ | Control Mode |
| H30** | 0 | 1 | 1 ✓ | Comm Function |
| E27 | 99 | 0 | 0 ✓ | Relay Function |
| P99 | 0 | 1 (HP) | 1 ✓ | Motor Type |
| P02 | Varies | See Motor Nameplate | .34 | Rated Capacity (HP) |
| Y01*** | 1 | 1 | ✓1 (Conveyor Only) | Drive Address |
| Y10 | 1 | 2 | ✓ 2 | Protocol |

***: If F03 needs to be greater than 70.0 (F15 Default), F15 must be changed first.**
****: 1 for Conveyor or Three Roller Wrap. 0 for all others.**
*****: 1 for Conveyor, 2 for Three Roller Wrap**
**P02 Reference for frequently used motors:**
**3/8 HP: 0.38, 1/6 HP: 0.17**

**Initialize Parameters**

- **Navigate to Parameter H03**
- **Use the STOP and UP Arrow to change H03 to "2". Press the Func/Data button.**
- **"Save" will flash on the display. H03 will revert back to "0" once the parameters are automatically set.**

**Set the Motor Current based on the Motor Nameplate value. Entered as Amps.**

| Parameter | Fuji Default | Motor Nameplate | Quadrel Final value |
|---|---|---|---|
| P03 | Varies | 1.4 | 1.4 |

**P03 Reference for frequently used motors:**
**3/8 HP: 1.9, 1/6 HP: 0.73**

**S03 Jumper Setting:**
**Default is in the OFF position.**
**Standard Systems: Set DR1 Conveyor to ON position. Other drives set to default/OFF.**
**Three Roller Systems: Set Wrap drive to ON position. Other drives set to default/OFF.**

**SINK/SOURCE Jumper Setting: SOURCE (All Drives)**

# WARNING

- **KEEP HAND CLEAR OF MOVING PARTS. DO NOT PLACE HANDS NEAR LABELING HEAD WHEN IN OPERATION**

- **DO NOT OPERATE EQUIPMENT WITHOUT GUARDS OR COVERS INSTALLED**

## 6.1 LABELING HEAD INFORMATION

### 6.1.1 LOADING AND UNLOADING STOCK ROLL

⚠ CAUTION

To avoid injuries, you must keep the labeler stopped/paused. You can manually jog labels with the JOG button.

Look carefully at the diagram and follow the threading procedures indicated below.

You will also find the threading diagram directly on the labeling head.

1) Place the label stock roll on the unwind shaft. Press the roll firmly against the flange. Then slide the locking collar over the unwind shaft aligning the set screw with the shaft. Press into the roll and twist to lock the collar in place.

2) Pull Approximately 36-40” of stock from label stock roll.

3) Follow the threading diagram on the labeling head for routing the web.
4) Thread through the dancer to the peel plate.

5) Feed the label around the peel plate and under the pressure shoe if ( if there is one). Feed the label up the head to the pull roll. Pull all the slack out.

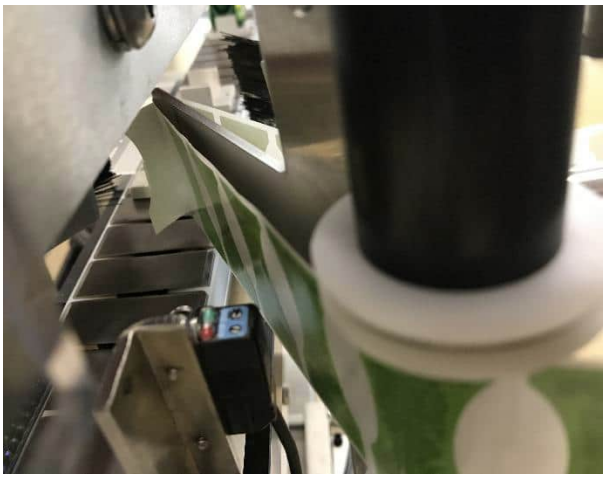

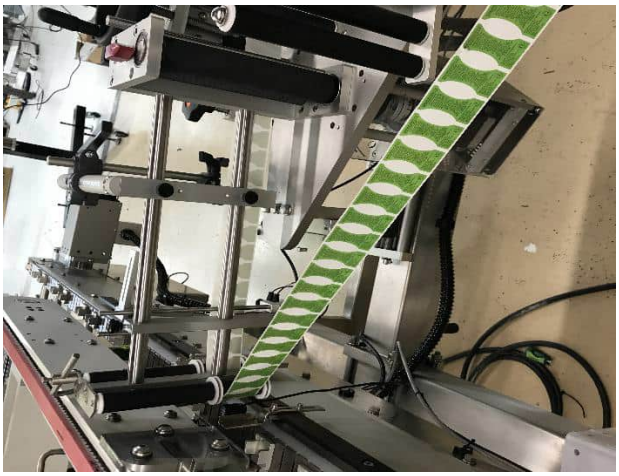

6) Wrap labels around the rubber roller as shown, then around the knurled roller. Make sure the knurled roller is not locked in by turning the red knob to the left or right of the red dot on the drive roll. When you have the labels completely threaded you can turn the knob to the red dot.

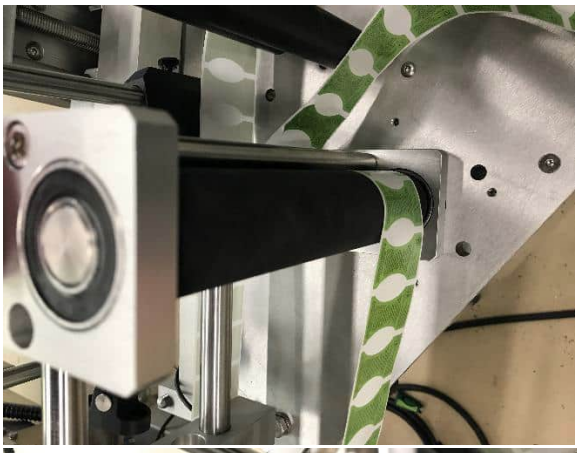

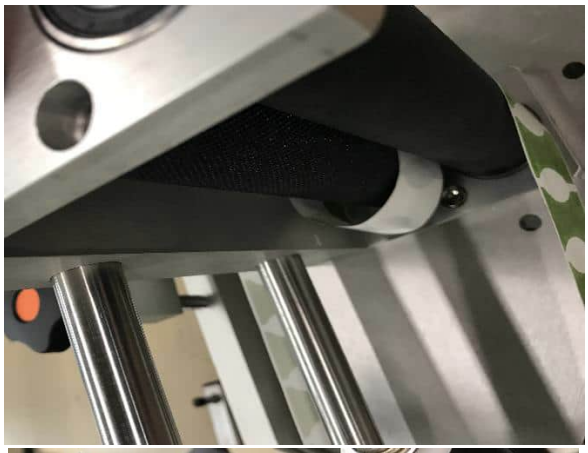

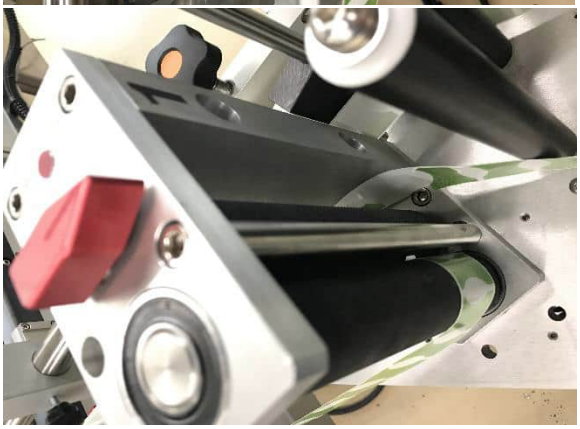

7) Thread the labels through the rewind dancers to the rewind shaft. Place the end of the label through the clip and rotate the rewind hub to take up the slack.

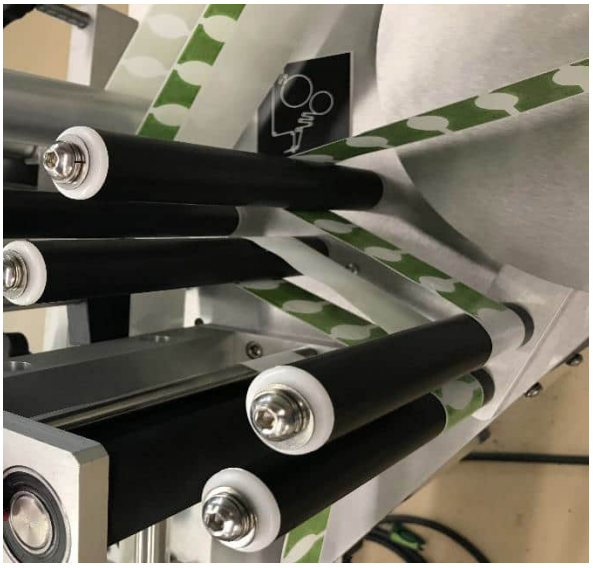

8) The finished product should look similar to the pictures below. Some heads are threaded differently depending on the style head you have. See threading diagrams on the head itself or the manual.

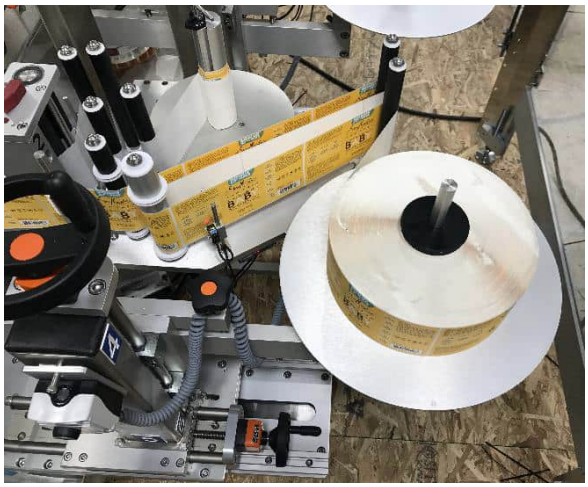

9) To unload the rewind loosen (counter clockwise) the “clevis” bolt on the top of the rewind hub. this will collapse the rewind and you can pull the liner off the hub.

⚠ CAUTION

There are many pinch points on a labeler. to avoid injury read and understand the owner’s manual before operating.

## 6.1.2 THREADING DIAGRAMS

Here are the following threading diagrams for our standard labeling heads.

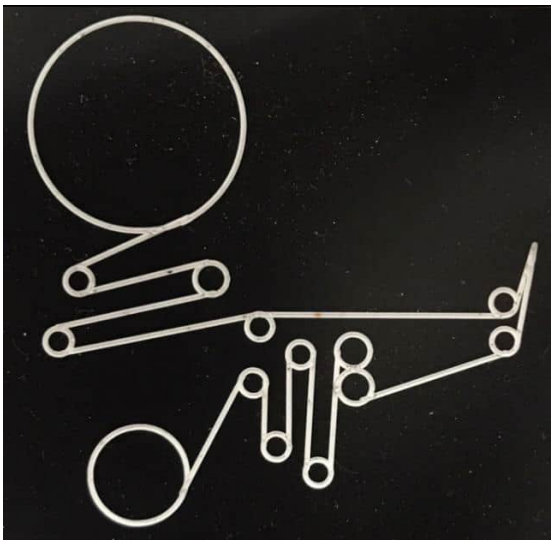

Q120/Q125/Q115/Q110

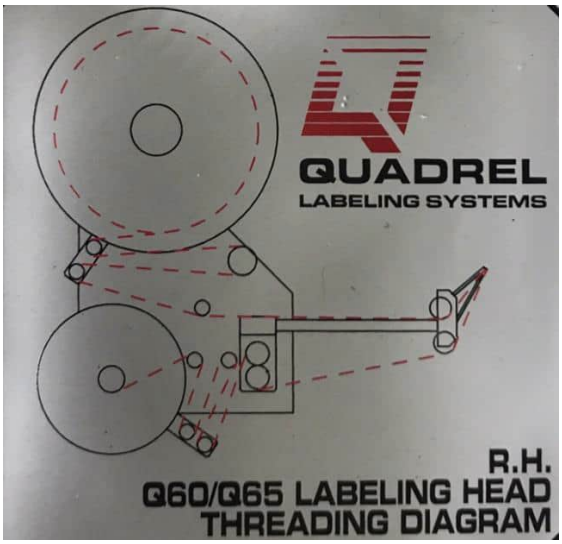


Q60/Q65

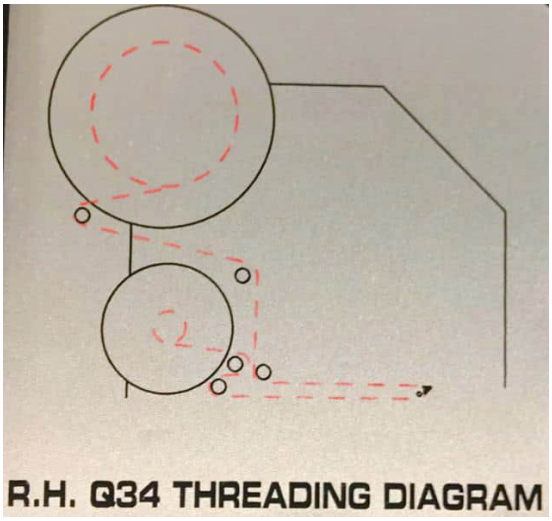


Q34

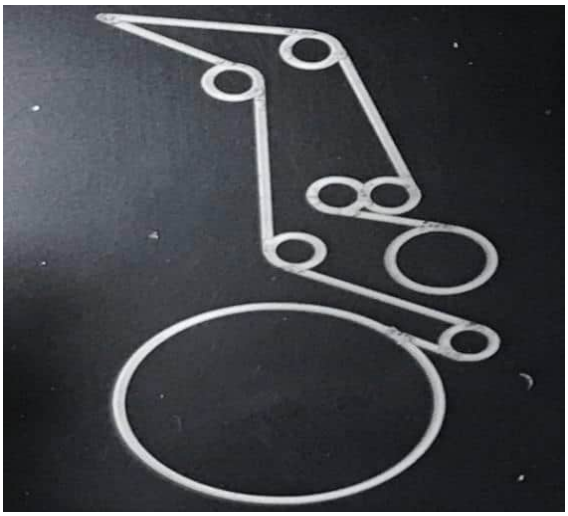

E100

## 6.1.3 LABELER ADJUSTMENTS

The vertical adjustment is to position the label on the container at different heights. It's practical if you have different size labels and/or containers. To adjust the height you simply rotate the handwheel at the top of the labeler counter clockwise to go down and clockwise to go up.

Horizontal adjustments are made the same way except you rotate the hand wheel under the labeler. Rotating the hand wheel counter clockwise will move the labeler in and rotating clockwise with move the labeler out.

To adjust the angle of the labeling head you first need to loosen the large ¾-10 nut with a 1 ¼ “wrench and the 5/16-18 hex head bolt. The angular adjustment is very important to increase the repeatability of the process. A good adjustment is when the exit of the label is tangent with the surface of the application.

⚠ CAUTION DO NOT remove the nut & bolt.

Now to adjust the tilt of the labeling head by tightening and loosening the jack screws.

Rotate adjustment is achieved by loosening the 2 ratchet handles under the labeling head. There is a jack screw holding the labeling head in place, but still use caution when loosening the ratchet handles the labeling head can rotate

freely when loose. This is a fine adjustment that increases the parallelism of the label to the shape of the container.

⚠ CAUTION When loosening the labeling head, the head may rotate freely. Keep positive pressure against the head to prevent the head from rotating on its own. `

**ASSEMBLY TITLE:** **Q65 LABELING HEAD - BRAKE BRUSH ASSEMBLY**

**DRAWING NO:** **NONE**

**GENERAL FUNCTION:**

- The brake brush establishes web tension and controls backlash

**SET UP AND ADJUSTMENTS:**

- For accurate label feeds, the web must establish proper tension.
- Loosen the holding set screw in the brake brush body. The brake brush assembly can now be rotated on axis.
- Turn brush body into the web and tighten. To check for proper web tension, jog a label and check for web slack. If the web is tight and the label feeds correctly, the brush tension is set correctly.
- If backlash persists, continue to increase brake brush tension.

**MAINTENANCE:**

- Replace brake brush when brush body contour no longer viable or bristles are worn down.

**TROUBLESHOOTING**:

| PROBLEM | WHAT TO DO |
|---|---|
| - Web break | -Too much brake tension. Decrease until no slack in web.<br>- Debris or brake flaw causing web tear |
| - Motor stall | - Decrease brake tension |
| - Too much web slack | - Increase brake tension |

**ASSEMBLY TITLE:** **LABELING HEAD - THREADING**

**GENERAL FUNCTION:**

- This section is used to guide the user through loading and feeding the label through the web path.

**SET UP AND ADJUSTMENTS:**

- Load label spool onto unwind hub. Secure unwind retainer onto hub and lock. Pull 3'-4' of web from unwind and strip labels free of web.
- Unlock the drive roller locking handle.
- Using the threading diagram located on the labeling head, feed the web through the labeling head. Start at the unwind dancer assembly and work forward.
- Feed the web through the drive roller assembly.
- Feed the web around the rewind dancer assembly and onto the rewind hub. Wrap the web around the hub once. Lock the web in place with the rewind retaining bracket.
- Once the web has been threaded, lock down the drive roll assembly by rotating the drive roll locking arm into the locked position. (Towards the drive roller assembly)

**MAINTENANCE:**

- None this section.

**TROUBLESHOOTING**:

| PROBLEM | WHAT TO DO |
|---|---|
| - Web break | - Check web path and insure web routed correctly.<br>- Debris causing web tear and break. Clear as needed. |
| - No Web Tension | - Check web path through unwind and dancer assembly.<br>- Check drive roller lock position. |

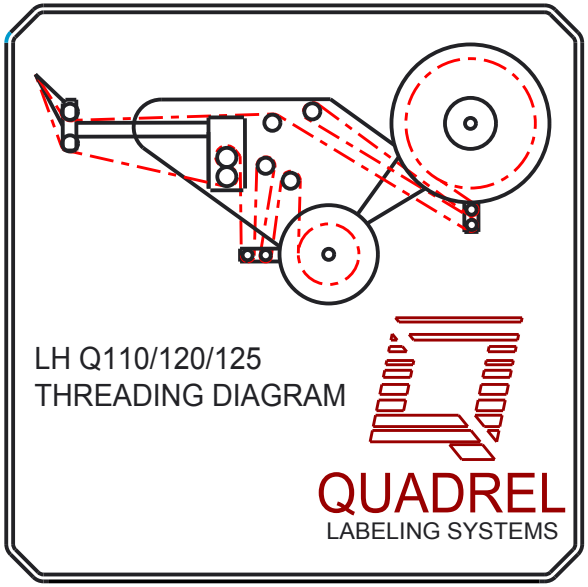


NOTES:

1) LABEL MATERIAL IS .003" ALUMINUM FOIL W/PERMANENT PRESSURE SENSITIVE ADHESIVE.

2) ALL LETTERING IS .125" HIGH EUROSTYLE 2, BOLD EXTENDED 2.

3) USE QUADREL STANDARD LOGO.

4) ALL LINES AND LETTERS ARE BLACK ON A SILVER BACKGROUND QUADREL AND (WEB PATH) ARE RED #(199c) LINES ARE DASHED LINES.

5) LABEL SIZE 3.0" X 3.0".

| REV | DATE | DESCRIPTION |
|---|---|---|
| | | |
| | | |
| A | 5-8-19 | NEW DRAWING |

THIS IS A PRO-ENGINEER DOCUMENT AND MAY NOT BE MODIFIED MANUALLY

UNLESS OTHERWISE SPECIFIED
DIMENSIONAL TOLERANCE

.X± .1
.XX± .01
.XXX± .005
ANGLES ± 30'

SURFACE FINISH 125
BREAK ALL EDGES .005/.015
CORNER RADIUS .010/.030

QUADREL LABELING SYSTEMS
7670 JENTHER DRIVE
MENTOR, OHIO 44060
(440) 602-4700

| | |
|---|---|
| SCALE: | DRAWING SCALE |
| DATE: | 5-8-19 |
| DRW BY: | TJS |
| CHK BY: | |
| APPR BY: | |

Q110/120/125 L.H. THREADING DIAGRAM

MAT'L
SEE NOTES

A26222-110LH

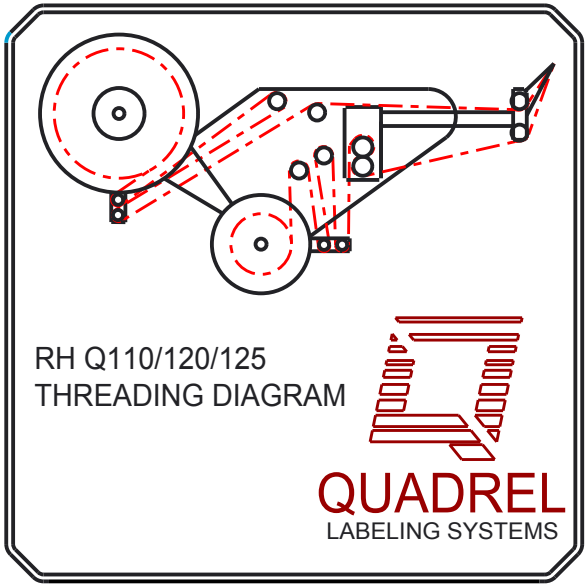


NOTES:

1) LABEL MATERIAL IS .003" ALUMINUM FOIL W/PERMANENT PRESSURE SENSITIVE ADHESIVE.

2) ALL LETTERING IS .125" HIGH EUROSTYLE 2, BOLD EXTENDED 2.

3) USE QUADREL STANDARD LOGO.

4) ALL LINES AND LETTERS ARE BLACK ON A SILVER BACKGROUND QUADREL AND (WEB PATH) ARE RED #(199c) LINES ARE DASHED LINES.

5) LABEL SIZE 3.0" X 3.0".

| REV | DATE | DESCRIPTION |
|---|---|---|
| | | |
| | | |
| A | 5-8-19 | NEW DRAWING |

THIS IS A PRO-ENGINEER DOCUMENT AND MAY NOT BE MODIFIED MANUALLY

UNLESS OTHERWISE SPECIFIED
DIMENSIONAL TOLERANCE

.X± .1
.XX± .01
.XXX± .005
ANGLES ± 30'

SURFACE FINISH 125
BREAK ALL EDGES .005/.015
CORNER RADIUS .010/.030

QUADREL LABELING SYSTEMS
7670 JENTHER DRIVE
MENTOR, OHIO 44060
(440) 602-4700

| | |
|---|---|
| SCALE: | DRAWING SCALE |
| DATE: | 5-8-19 |
| DRW BY: | TJS |
| CHK BY: | |
| APPR BY: | |

Q110/120/125 R.H. THREADING DIAGRAM

MAT'L
SEE NOTES

A26222-110RH

**ASSEMBLY TITLE:** **Q65 SIDE PLATE ASSEMBLY**

**DRAWING NO.:** **D24272-000**

**GENERAL FUNCTION:**

- To provide a rigid mounting surface for outboard labeling components, electronic components, and system components.
- The side plate also supports the system mount

**SET UP AND ADJUSTMENTS:**

- None

**MAINTENANCE:**

- None

**TROUBLESHOOTING:**

- None

| ITEM | QTY | PART NO. | DESCRIPTION | PARENT ITEM |
|---|---|---|---|---|
| 1 | 1 | 00669-01 | BRAKE BRUSH 2 x 7 nylon | 23100SP-007LH |
| 2 | 2 | 181062-000 | BEARING, ROLL END | 23100SP-007LH |
| 3 | 6 | 181063-000 | BEARING, ROLL END | 23100SP-007LH |
| 4 | 1 | A20654-003 | ADJ. ROD | 23100SP-007LH |
| 5 | 3 | A20928-001 | ROLLER SHAFT | 23100SP-007LH |
| 6 | 1 | A21618-001 | IDLER SHAFT | 23100SP-007LH |
| 7 | 1 | A22291-006 | ROLLER | 23100SP-007LH |
| 8 | 3 | B20071-002 | IDLER ROLLER (DANCER) | 23100SP-007LH |
| 9 | 1 | D22800-120_REVC | SIDE PLATE, MOD. | 23100SP-007LH |

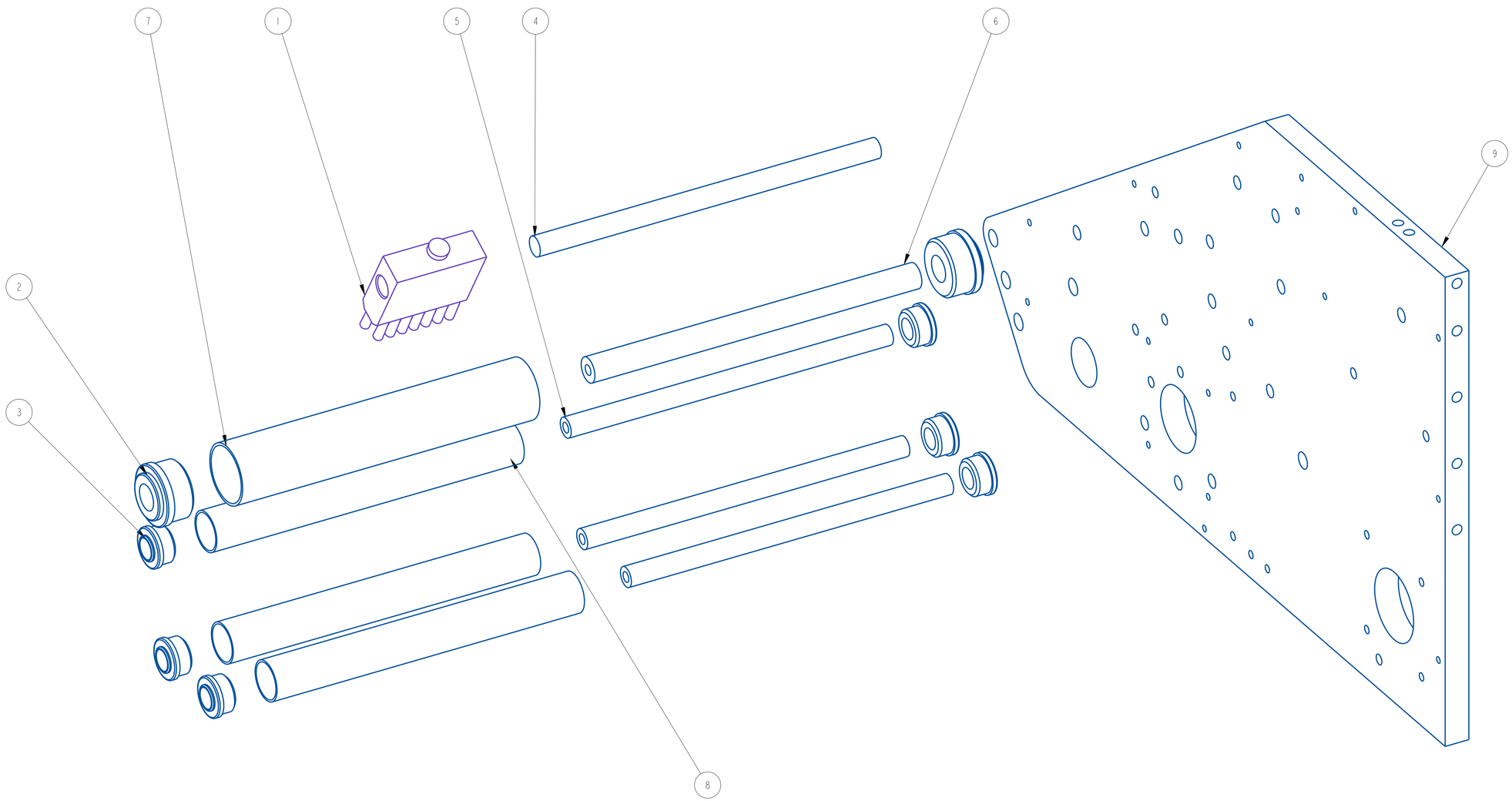


| REV | DATE | DESCRIPTION | BY |
|---|---|---|---|
| A | 09/08/25 | NEW DRAWING | SEM |

THIS IS A PRO-ENGINEER DOCUMENT AND MAY NOT BE MODIFIED MANUALLY

UNLESS OTHERWISE SPECIFIED
DIMENSIONAL TOLERANCE
X ± .1
XX ± .01
XXX ± .005
ANGLES ± 30'

SURFACE FINISH 125
BREAK ALL EDGES .005/.015
CORNER RADIUS .010/.030
ALL ANGLES ARE 90°


QUADREL LABELING SYSTEMS
7670 JENTHER DRIVE
MENTOR, OHIO 44060
(440) 602-4700


| | |
|---|---|
| SCALE: | 3/4 |
| DATE: | 09/08/25 |
| DRW BY: | SEM |
| CHK BY: | NEW |
| APPR BY: | |

SIDE PLATE ASSEMBLY, 7"

MAT'L

23100SP-007LH

SHEET 1 OF 2

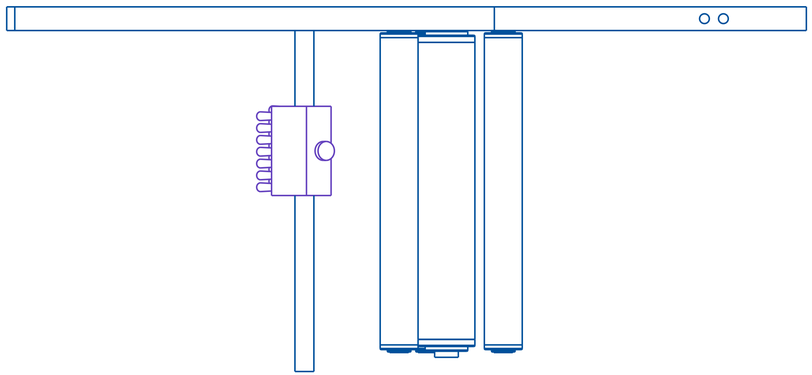

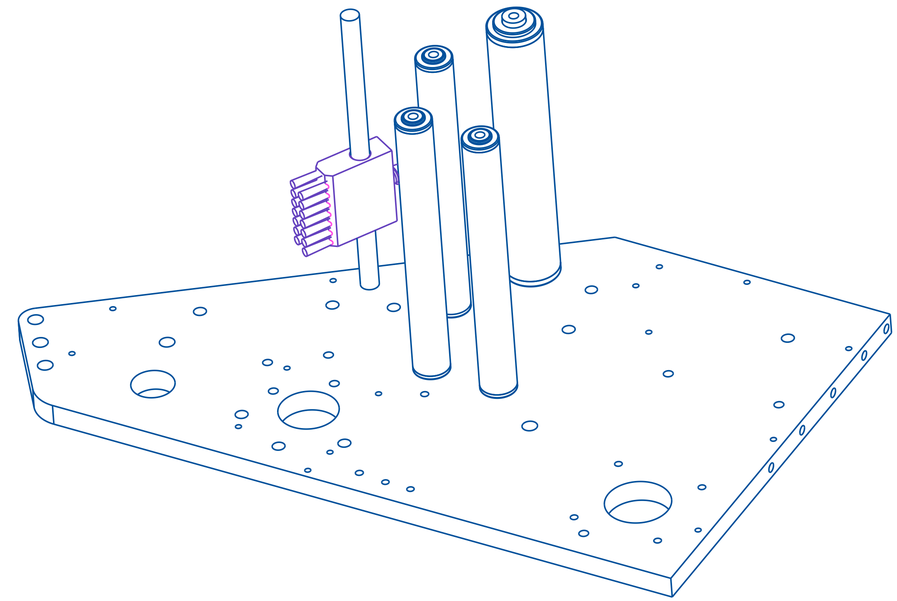

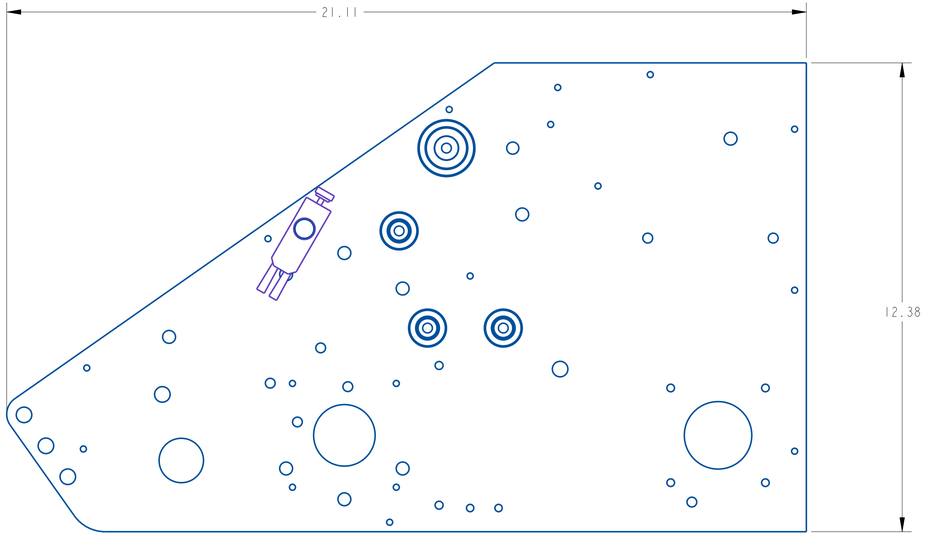


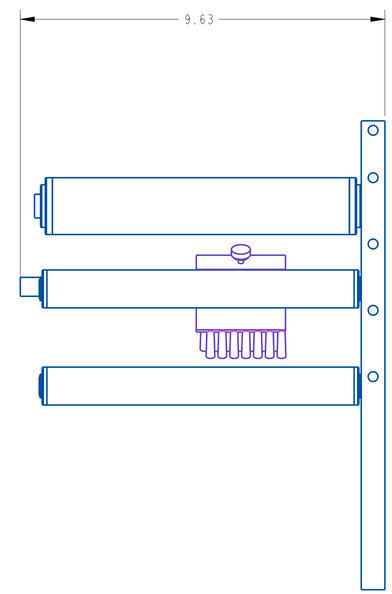


| REV | DATE | DESCRIPTION | BYE |
|---|---|---|---|
| A | 09/08/25 | NEW DRAWING | 09/08/25 |

THIS IS A PRO-ENGINEER DOCUMENT AND MAY NOT BE MODIFIED MANUALLY

UNLESS OTHERWISE SPECIFIED
DIMENSIONAL TOLERANCE
X ± .1
XX ± .01
XXX ± .005
ANGLES ± 30'
SURFACE FINISH 125
BREAK ALL EDGES .005/.015
CORNER RADIUS .010/.030
ALL ANGLES ARE 90°

QUADREL LABELING SYSTEMS
7670 JENTHER DRIVE
MENTOR, OHIO 44060
(440) 602-4700

| | |
|---|---|
| SCALE: | 1/2 |
| DATE: | 09/08/25 |
| DRW BY: | SEM |
| CHK BY: | NEW |
| APPR BY: | |

SIDE PLATE ASSEMBLY, 7"

MAT'L

23100SP-007LH

SHEET 2 OF 2

| ITEM | QTY | PART NO. | DESCRIPTION | PARENT ITEM |
|---|---|---|---|---|
| 1 | 1 | 00669-01 | BRAKE BRUSH 2 x 7 nylon | 23100SP-007RH |
| 2 | 2 | 181062-000 | BEARING, ROLL END | 23100SP-007RH |
| 3 | 6 | 181063-000 | BEARING, ROLL END | 23100SP-007RH |
| 4 | 1 | A20654-003 | ADJ. ROD | 23100SP-007RH |
| 5 | 3 | A20928-001 | ROLLER SHAFT | 23100SP-007RH |
| 6 | 1 | A21618-001 | IDLER SHAFT | 23100SP-007RH |
| 7 | 1 | A22291-006 | ROLLER | 23100SP-007RH |
| 8 | 3 | B20071-002 | IDLER ROLLER (DANCER) | 23100SP-007RH |
| 9 | 1 | D22800-120_REVC | SIDE PLATE, MOD. | 23100SP-007RH |

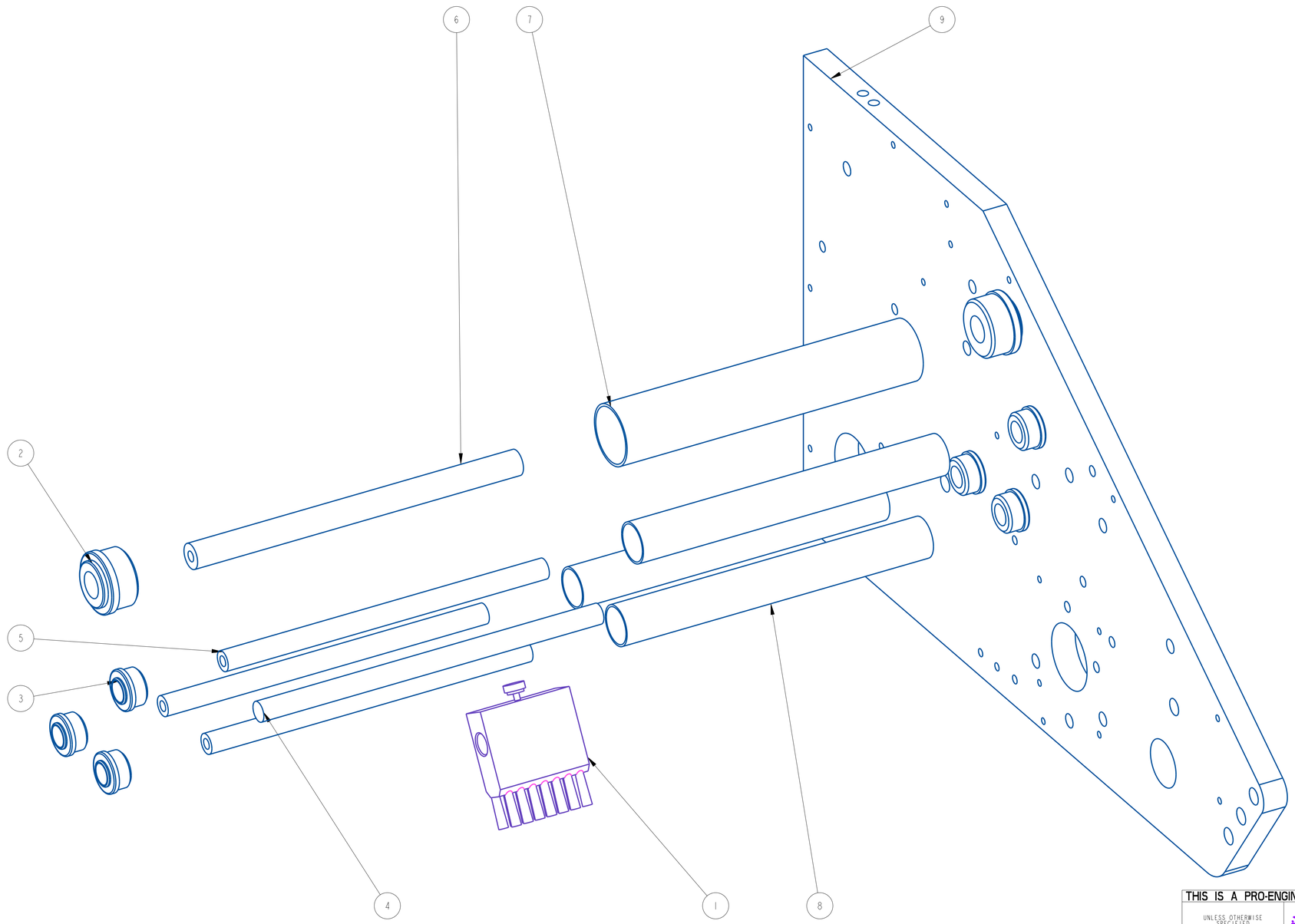


| REV | DATE | DESCRIPTION | BY |
|---|---|---|---|
| A | Oct-06-25 | NEW DRAWING | RDL |

THIS IS A PRO-ENGINEER DOCUMENT AND MAY NOT BE MODIFIED MANUALLY

UNLESS OTHERWISE SPECIFIED
DIMENSIONAL TOLERANCE
X ± .1
XX ± .01
XXX ± .005
ANGLES ± 30°
SURFACE FINISH 125
BREAK ALL EDGES .005/.015
CORNER RADIUS .010/.030"
ALL ANGLES ARE 90°

QUADREL LABELING SYSTEMS
7670 JENTHER DRIVE
MENTOR, OHIO 44060
(440) 602-4700

SCALE: 3/4
DATE: Oct-06-25
DRW BY: RDL
CHK BY:
APPR BY:

SIDE PLATE ASSEMBLY, 7"

MAT'L

23100SP-007RH

SHEET 1 OF 2

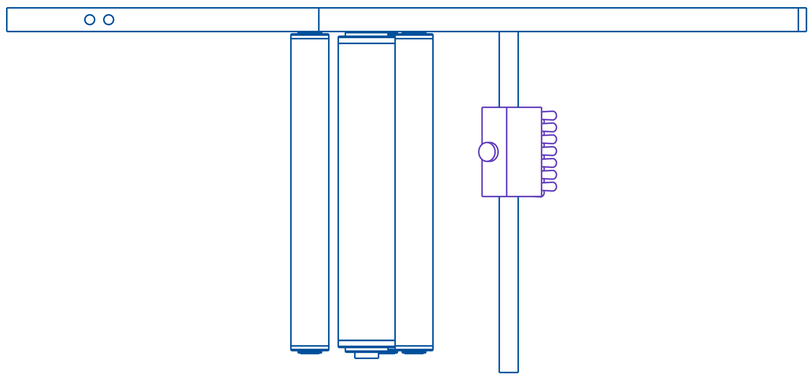

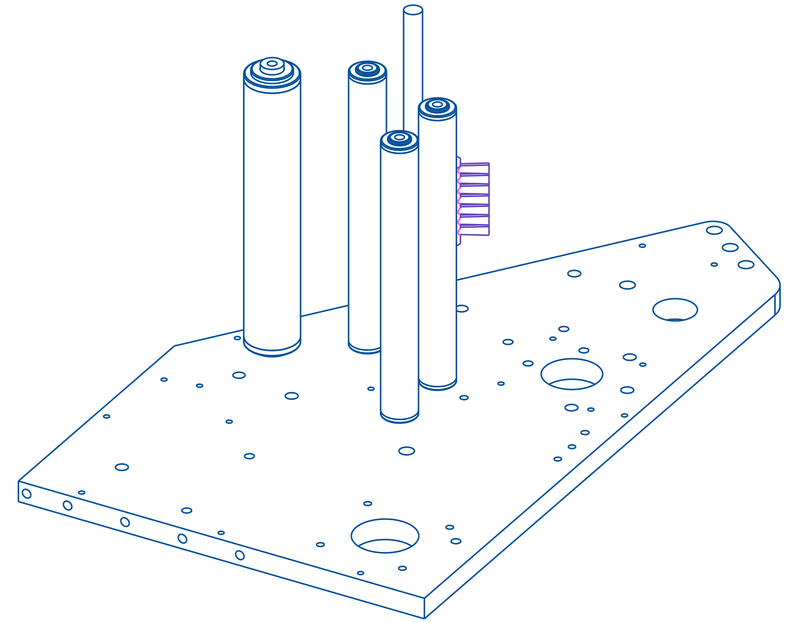

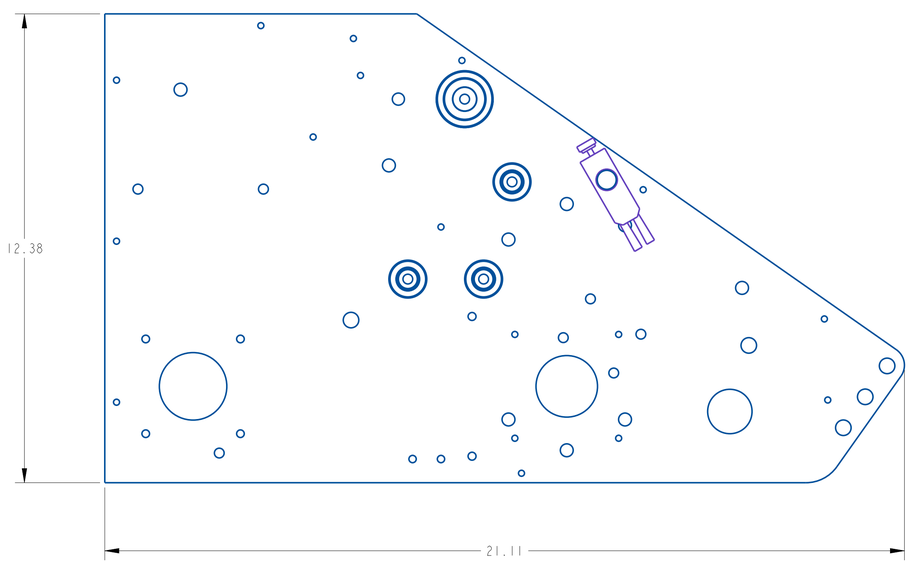


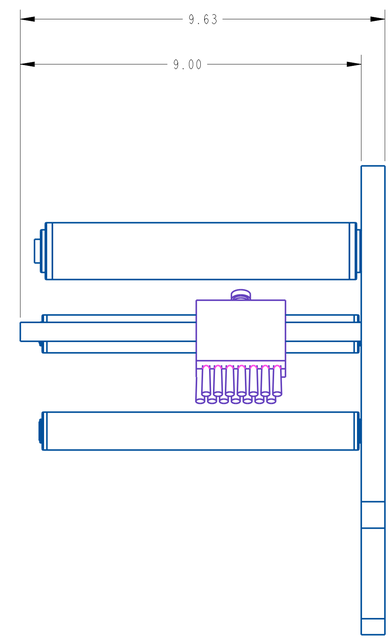


| REV | DATE | DESCRIPTION | BY |
|---|---|---|---|
| A | Oct-06-25 | NEW DRAWING | RDL |

THIS IS A PRO-ENGINEER DOCUMENT AND MAY NOT BE MODIFIED MANUALLY

UNLESS OTHERWISE SPECIFIED
DIMENSIONAL TOLERANCE
X ± .1
XX ± .01
XXX ± .005
ANGLES ± 30°
SURFACE FINISH 125
BREAK ALL EDGES .005/.015
CORNER RADIUS .010/.030
ALL ANGLES ARE 90°

QUADREL LABELING SYSTEMS
7670 JENTHER DRIVE
MENTOR, OHIO 44060
(440) 602-4700

SCALE: 1/2
DATE: Oct-06-25
DRW BY: RDL
CHK BY:
APPR BY:

SIDE PLATE ASSEMBLY, 7"

MAT'L

23100SP-007RH

SHEET 2 OF 2

**ASSEMBLY TITLE:** **Q65 7” UNWIND ASSEMBLY**

**DRAWING NO.:** **D21434-000**

**GENERAL FUNCTION:**

- Unwind flange provides support for label rolls (side application)
- Dual flanges prevent roll and label movement (top application)
- Dancer arm prevents roll run-away.
- Idler roller with guide collars guides web through slot sensor.
- Brake brush prevents web buckling through slot sensor.

**SET UP AND ADJUSTMENTS:**

- Move flange to required height and tighten set screw in flange hub.
- For top labeling, add second flange and tighten ratchet knob.
- Adjust dancer tension by turning check nut so that dancer roll snaps back to braking position when labeling head is threaded.
- Slide brake brush so that center of brush lines up with center of web.
- Rotate brush to provide web tension, then lock into place using the locking knob.
- Position guide collars on idler roll, one slightly above, the other slightly below the web.

**DANCER TENSION ADJUSTMENT LOCATION:**

- **The unwind tension adjustment is located on the middle underside of the Q65 head. Use the knurled ring to adjust the dancer tension.**

**MAINTENANCE:**

- Clean all the parts that may acquire glue residue

**TROUBLESHOOTING:**

| PROBLEM | WHAT TO DO |
|---|---|
| - Unwind roll run-away | - Tighten dancer spring, check nut or replace dancer spring, if necessary. |
| - Unwind roll not stopping | - Replace brake ring-belt if broken, or unevenly worn. |
| - Drive roll stalling | - Release web tension produced by brake brush. |
| - Brush taking fixed shape | - Turn brush around |

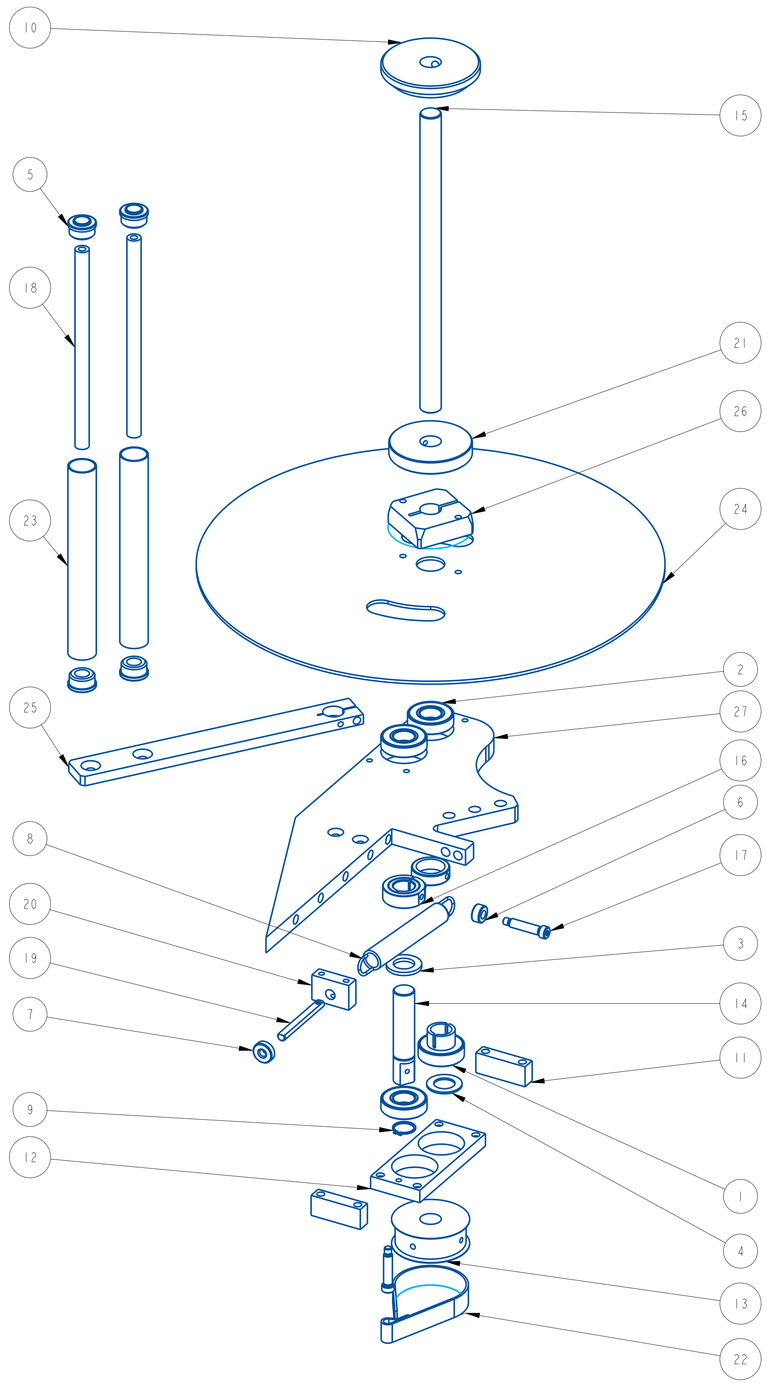


| ITEM | QTY | PART NO. | DESCRIPTION | PARENT ITEM |
|---|---|---|---|---|
| 1 | 1 | 111044-000 | BEARING, 3/4 ID CLAMP TYPE | 23100U-007RH |
| 2 | 3 | 111074-000 | BEARING, BALL | 23100U-007RH |
| 3 | 1 | 151001-000 | BEARING, THRUST WASHER | 23100U-007RH |
| 4 | 1 | 151006-000 | BEARING, THRUST WASHER | 23100U-007RH |
| 5 | 4 | 181063-000 | BEARING, ROLL END | 23100U-007RH |
| 6 | 1 | 361165-000 | COLLAR, SETSCREW, 5/16" BORE | 23100U-007RH |
| 7 | 1 | 801601-000 | CHECK NUT | 23100U-007RH |
| 8 | 1 | 811216-000 | EXTENSION SPRING, STAINLESS | 23100U-007RH |
| 9 | 1 | 871025-000 | EXTERNAL SNAP RING | 23100U-007RH |
| 10 | 1 | A20583-000 | QUICK LOCK COLLAR REWORK | 23100U-007RH |
| 11 | 2 | A20585-000 | SUPPORT SPACER | 23100U-007RH |
| 12 | 1 | A20590-000 | BEARING PLATE | 23100U-007RH |
| 13 | 1 | A20591-000 | UNWIND BRAKE DRUM | 23100U-007RH |
| 14 | 1 | A20592-200 | UNWIND DANCER SHAFT | 23100U-007RH |
| 15 | 1 | A20593-001 | UNWIND SHAFT | 23100U-007RH |
| 16 | 1 | A20595-000 | DANCER COLLAR | 23100U-007RH |
| 17 | 2 | A20596-000 | DANCER BOLT | 23100U-007RH |
| 18 | 2 | A20928-002 | ROLLER SHAFT | 23100U-007RH |
| 19 | 1 | A23131-000 | STUD | 23100U-007RH |
| 20 | 1 | A23298-000 | BLOCK, SPRING TENSION | 23100U-007RH |
| 21 | 1 | A23406-000 | SUPPLY REEL CENTER HUB | 23100U-007RH |
| 22 | 1 | A25825-000_22620 | BRAKE BAND | 23100U-007RH |
| 23 | 2 | B20071-003 | IDLER ROLLER (DANCER) | 23100U-007RH |
| 24 | 1 | B20980-001 | UNWIND FLANGE | 23100U-007RH |
| 25 | 1 | B21113-000 | DANCER ARM, 16" UNWIND | 23100U-007RH |
| 26 | 1 | B21931-001 | CORE HUB | 23100U-007RH |
| 27 | 1 | C21236-120 | UNWIND SUPPORT PLATE | 23100U-007RH |

| REV | DATE | DESCRIPTION | BY |
|---|---|---|---|
| A | Sep-26-25 | NEW DRAWING | RDL |

THIS IS A PRO-ENGINEER DOCUMENT AND MAY NOT BE MODIFIED MANUALLY

UNLESS OTHERWISE SPECIFIED
DIMENSIONAL TOLERANCE
X ± .1
XX ± .01
XXX ± .005
ANGLES ± 30°

SURFACE FINISH 125
BREAK ALL EDGES .005/.015
CORNER RADIUS .010/.030

QUADREL LABELING SYSTEMS
7670 JENTHER DRIVE
MENTOR, OHIO 44060
(440) 602-4700

SCALE: 3/8
DATE: Sep-26-25
DRW BY: RDL
CHK BY:
APPR BY:

UNWIND ASSEMBLY, 7"

MAT'L

23100U-007RH

SHEET 1 OF 2

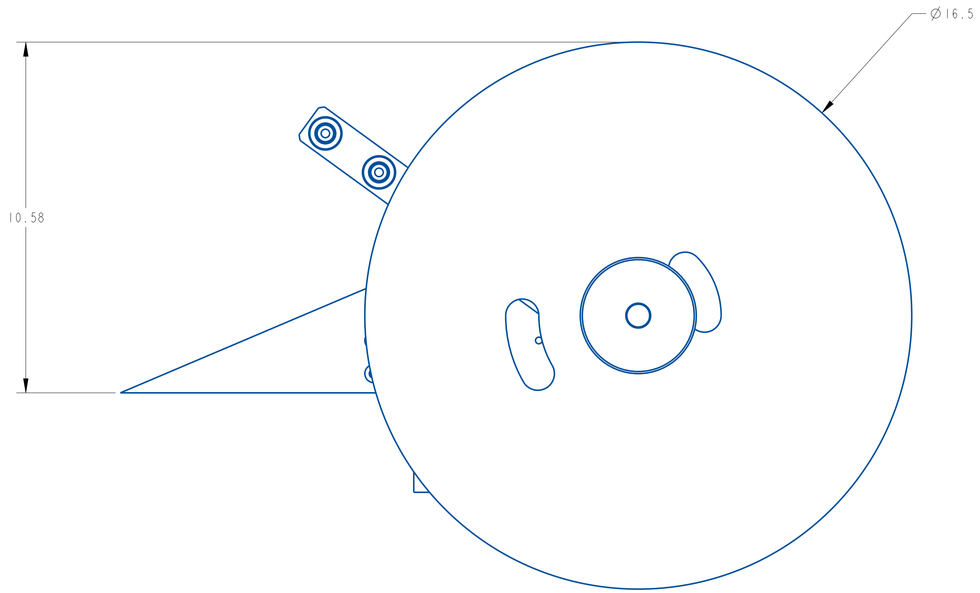


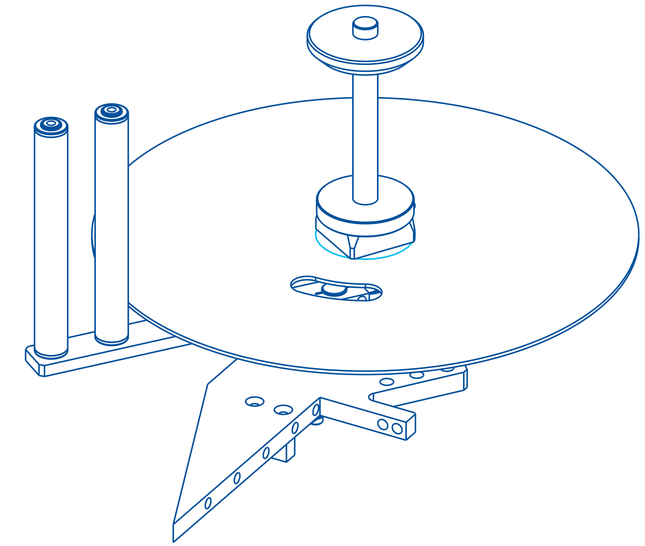

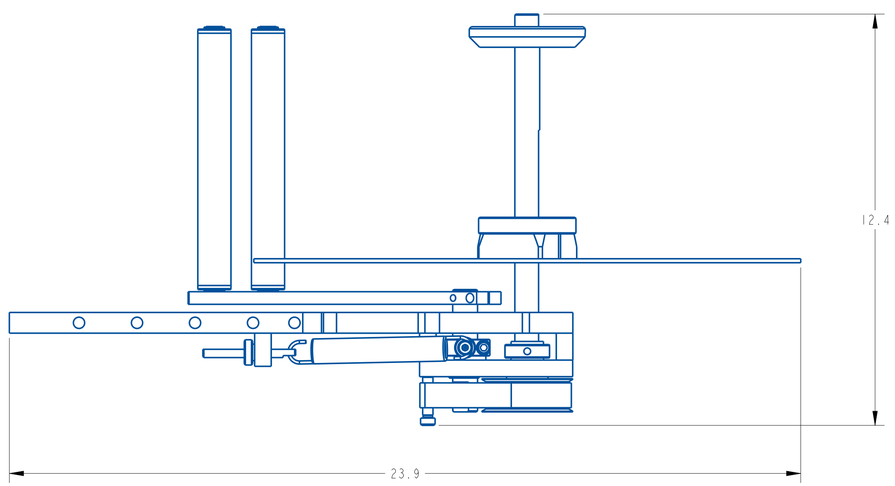


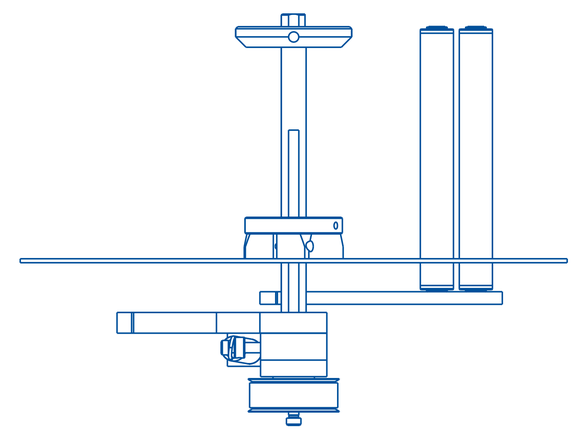

| REV | DATE | DESCRIPTION | BY |
|---|---|---|---|
| A | Sep-26-25 | NEW DRAWING | RDL |

THIS IS A PRO-ENGINEER DOCUMENT AND MAY NOT BE MODIFIED MANUALLY

UNLESS OTHERWISE SPECIFIED
DIMENSIONAL TOLERANCE
X ± .1
XX ± .01
XXX ± .005
ANGLES ± 30'
SURFACE FINISH 125
BREAK ALL EDGES .005/.015
CORNER RADIUS .010/.030
ALL ANGLES ARE 90°

QUADREL LABELING SYSTEMS
7670 JENTHER DRIVE
MENTOR, OHIO 44060
(440) 602-4700

| | |
|---|---|
| SCALE: | 7/16 |
| DATE: | Sep-26-25 |
| DRW BY: | RDL |
| CHK BY: | |
| APPR BY: | |

UNWIND ASSEMBLY, 7"

MAT'L

23100U-007RH

SHEET 2 OF 2

| ITEM | QTY | PART NO. | DESCRIPTION | PARENT ITEM |
|---|---|---|---|---|
| 1 | 2 | 00669-01 | BRAKE BRUSH | 22620HS-000 |
| 2 | 4 | 181073-000 | BEARING, ROLL END | 22620HS-000 |
| 3 | 4 | 361200-000 | COLLAR, GUIDE, 2" ID | 22620HS-000 |
| 4 | 2 | A20654-003 | ADJ. ROD | 22620HS-000 |
| 5 | 2 | A21535-001 | BRAKE BRUSH MTG. BAR | 22620HS-000 |
| 6 | 2 | A25695-000 | ROLLER SHAFT | 22620HS-000 |
| 7 | 2 | A25696-000 | IDLER ROLLER | 22620HS-000 |
| 8 | 1 | A25750-021_50 | PEEL PLATE MTG. ROD | 22620HS-000 |
| 9 | 1 | A25751-021_50 | PEEL PLATE MTG. ROD | 22620HS-000 |
| 10 | 2 | B22301-111 | RAIL HOLDER MTG PLATE | 22620HS-000 |
| 11 | 2 | B22531-002 | RAIL MTG BAR | 22620HS-000 |

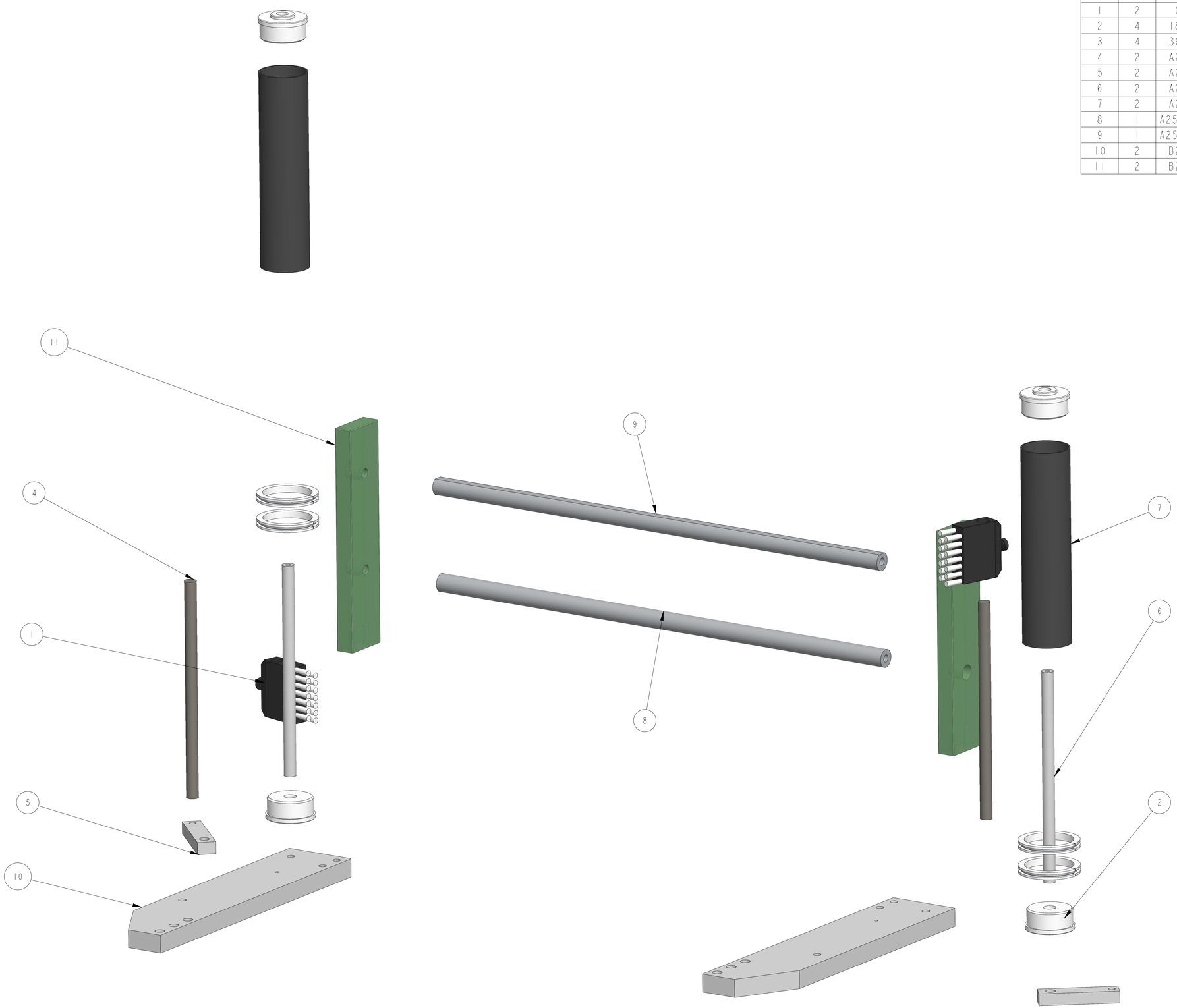


SHEET 1 OF 2

| REV | DATE | DESCRIPTION | BY |
|---|---|---|---|
| A | 1-23-19 | NEW DRAWING | TJS |

THIS IS A PRO-ENGINEER DOCUMENT AND MAY NOT BE MODIFIED MANUALLY

UNLESS OTHERWISE SPECIFIED
DIMENSIONAL TOLERANCE
X ± .1
XX ± .01
XXX ± .005
ANGLES ± 30°

SURFACE FINISH 125
BREAK ALL EDGES .005/.015
CORNER RADIUS .010/.030

QUADREL LABELING SYSTEMS
7670 JENTHER DRIVE
MENTOR, OHIO 44060
(440) 602-4700

SCALE: 1/2
DATE: 1-23-19
DRW BY: TJS
CHK BY: 05/17/2024-SEM
APPR BY:

Q105/110/120/125 HOT STAMP ADD ON KIT

MAT'L

22620HS-000

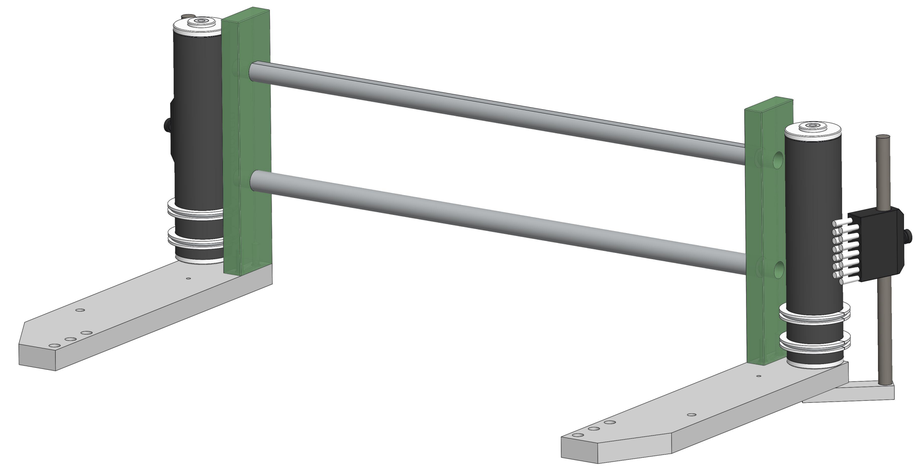

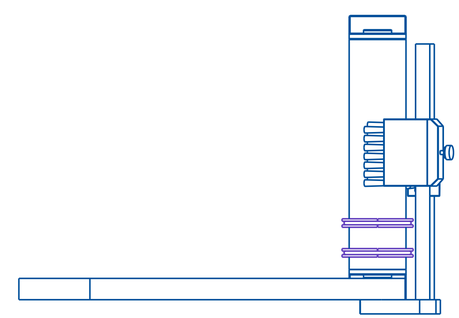

| REV | DATE | DESCRIPTION | BY |
|---|---|---|---|
| A | 1-23-19 | NEW DRAWING | TJS |

THIS IS A PRO-ENGINEER DOCUMENT AND MAY NOT BE MODIFIED MANUALLY

UNLESS OTHERWISE SPECIFIED
DIMENSIONAL TOLERANCE
X ± .1
XX ± .01
XXX ± .005
ANGLES ± 30'

SURFACE FINISH 125
BREAK ALL EDGES .005/.015
CORNER RADIUS .010/.030
ALL ANGLES ARE 90°

QUADREL LABELING SYSTEMS
7670 JENTHER DRIVE
MENTOR, OHIO 44060
(440) 602-4700

SCALE: 3/8
DATE: 1-23-19
DRW BY: TJS
CHK BY:05/17/2024-SEM
APPR BY:

Q105/110/120/125 HOT STAMP ADD ON KIT

MAT'L

22620HS-000

SHEET 2 OF 2

**ASSEMBLY TITLE:** **MOUNTING BRACKET ASSEMBLY**

**DRAWING NO.:** **D21825-000**

**GENERAL FUNCTION:**

- The bracket assembly is the main mounting assembly to mount the imprinter to the head .
- Adjustments are provided to set the imprinters location on the label.

**SET UP AND ADJUSTMENTS:**

- Loosen the locking handle on top of assembly use the adjusting knob to make the correction of the imprinter head.
- Re-tighten each handle when the correct angular position is set.

**NOTE:** Make sure each handle is secure, the imprinter head is heavy and could rotate if the locking handles are not firmly secured.

**MAINTENANCE:**

- No scheduled maintenance for this assembly.

**TROUBLESHOOTING:**

| Problem | What To Do |
|---|---|
| - Labeler angular position moves | Secure locking tension by turning locking handles clock-wise |

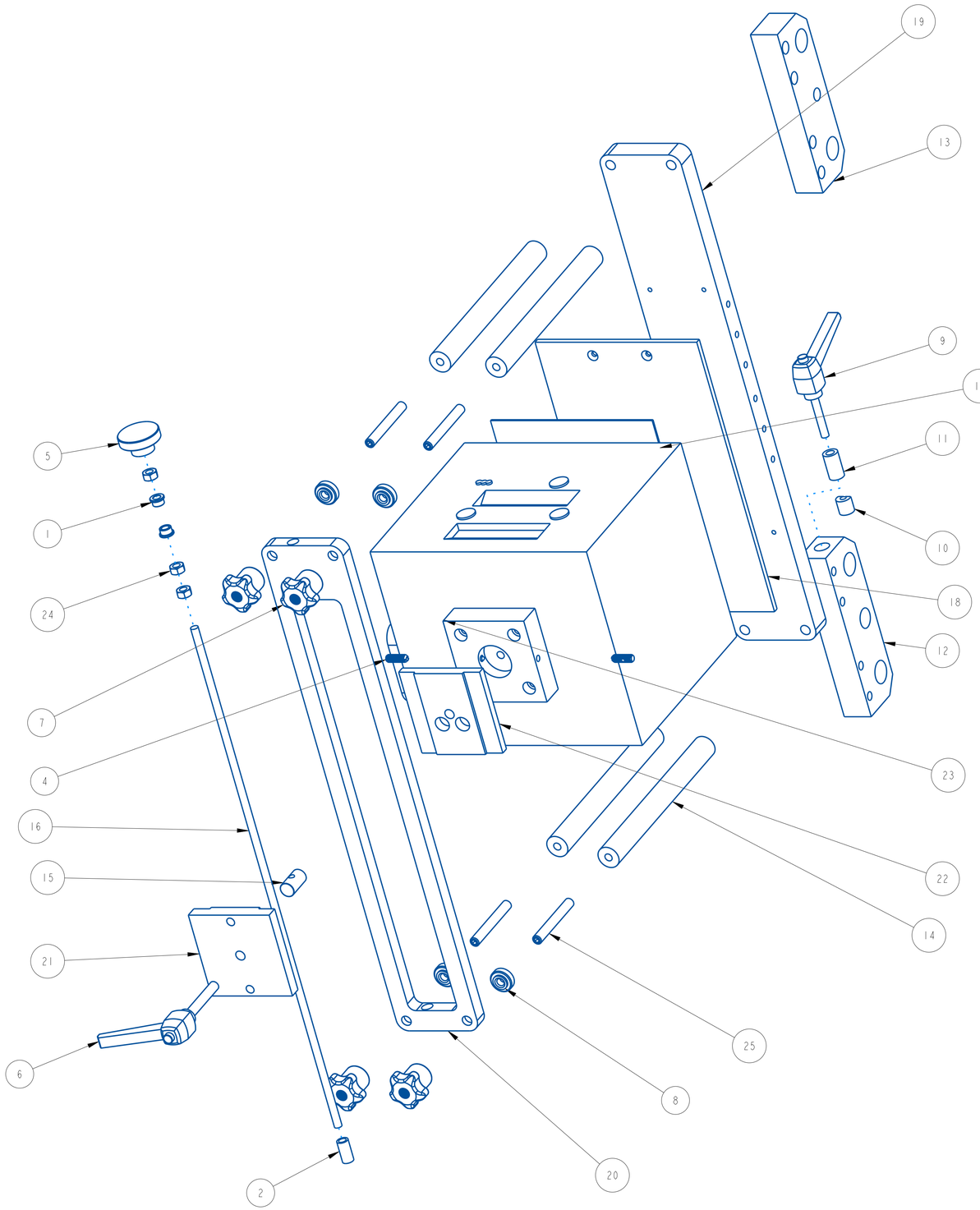


| ITEM | QTY | PART NO. | DESCRIPTION | PARENT ITEM |
|---|---|---|---|---|
| 1 | 2 | 131074-000 | BEARING, FLANGED | 21928-621 |
| 2 | 1 | 141095-000 | SLEEVE BEARING | 21928-621 |
| 3 | 1 | 771392-002 | VIDEOJET 6230 32MM RH PRINTER | 21928-621 |
| 4 | 2 | 791531-000 | SPRING PLUNGER, 1/4-20 | 21928-621 |
| 5 | 1 | 801274-000 | KNOB, 1/4-20 | 21928-621 |
| 6 | 1 | 801312-000 | CLAMPING LEVER | 21928-621 |
| 7 | 4 | 801327-000 | KNOB | 21928-621 |
| 8 | 4 | 801601-000 | CHECK NUT | 21928-621 |
| 9 | 1 | 801836-000 | CLAMPING LEVER | 21928-621 |
| 10 | 1 | A21008-000 | LOCKING CLAMP (THREADED) | 21928-621 |
| 11 | 1 | A21009-000 | LOCKING CLAMP (CLEARANCE) | 21928-621 |
| 12 | 1 | A21154-001 | PRINTER MTG. PLATE - LOCKING (7" WEB) | 21928-621 |
| 13 | 1 | A21155-001 | PRINTER MTG. PLATE (7" WEB) | 21928-621 |
| 14 | 4 | A24438-004 | SPACER, ROD | 21928-621 |
| 15 | 1 | A24440-000 | BRASS, NUT | 21928-621 |
| 16 | 1 | A24442-000 | THREADED ROD | 21928-621 |
| 17 | 1 | A25075-001 | IMPRINTER PAD | 21928-621 |
| 18 | 1 | A25140-000 | IMPRINTER PLATE | 21928-621 |
| 19 | 1 | B21565-001 | END PLATE, MOUNTING | 21928-621 |
| 20 | 1 | B21566-000 | TOP PLATE, MOUNTING | 21928-621 |
| 21 | 1 | B21568-000 | SLIDING PLATE, MOUNTING | 21928-621 |
| 22 | 1 | B21569-000 | INDEX PLATE, MOUNTING | 21928-621 |
| 23 | 1 | B21570-000 | BLOCK, MOUNTING SMART DATE | 21928-621 |
| 24 | 3 | RHN010 | | 21928-621 |
| 25 | 4 | SYE616 | | 21928-621 |

| REV | DATE | DESCRIPTION | BY |
|---|---|---|---|
| A | 11-26-13 | NEW DRAWING | CRT |

THIS IS A PRO-ENGINEER DOCUMENT AND MAY NOT BE MODIFIED MANUALLY

UNLESS OTHERWISE SPECIFIED
DIMENSIONAL TOLERANCE
X ± .1
XX ± .01
XXX ± .005
ANGLES ± 30°

SURFACE FINISH 125
BREAK ALL EDGES .005/.015
CORNER RADIUS .010/.030

QUADREL LABELING SYSTEMS
7670 JENTHER DRIVE
MENTOR, OHIO 44060
(440) 602-4700

SCALE: 1/2
DATE: 11-26-13
DRW BY: CRT
CHK BY: 05/17/2024-SEM
APPR BY:

CODER MOUNT SMARTDATE

MAT'L

21928-621

SHEET 1 OF 2

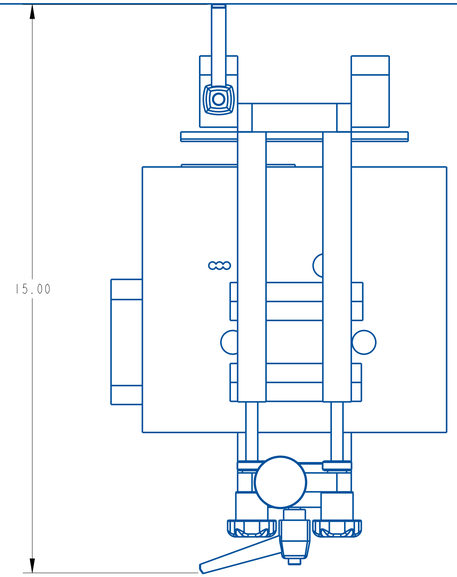


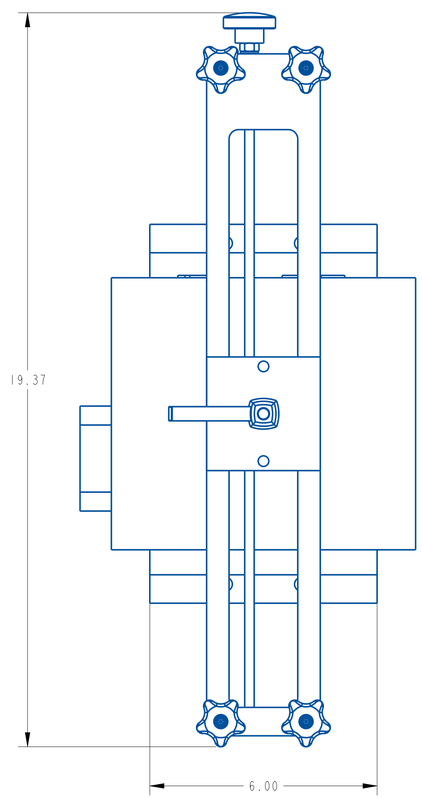


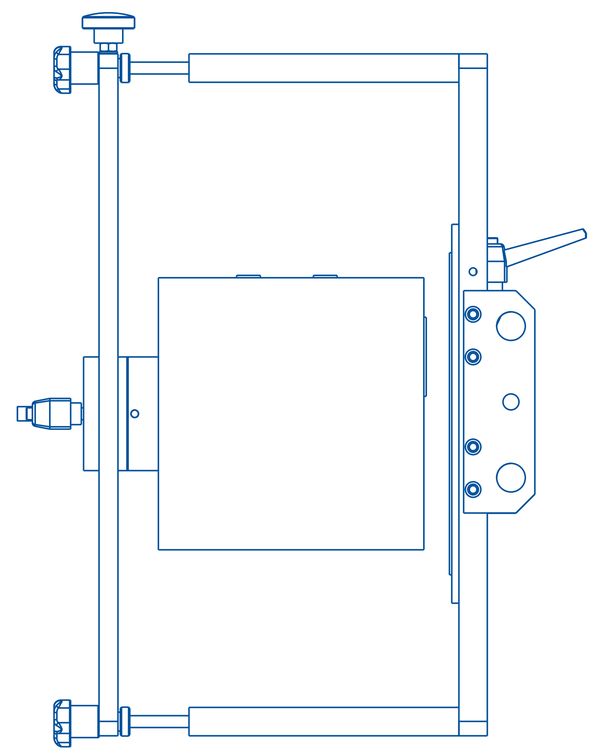

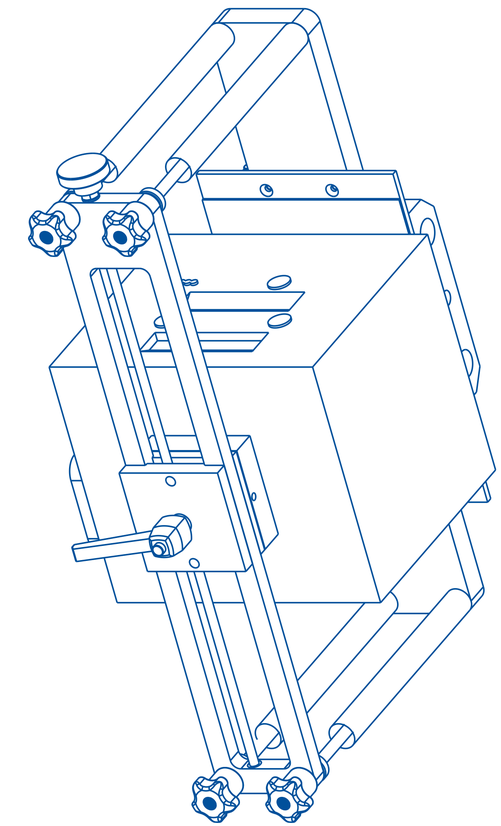

| REV | DATE | DESCRIPTION | BY |
|---|---|---|---|
| A | 11-26-13 | NEW DRAWING | CRT |

THIS IS A PRO-ENGINEER DOCUMENT AND MAY NOT BE MODIFIED MANUALLY

UNLESS OTHERWISE SPECIFIED
DIMENSIONAL TOLERANCE
.X ± .1
.XX ± .01
.XXX ± .005
ANGLES ± 30'

SURFACE FINISH 125
BREAK ALL EDGES .005/.015
CORNER RADIUS .010/.030
ALL ANGLES ARE 90°

QUADREL LABELING SYSTEMS
7670 JENTHER DRIVE
MENTOR, OHIO 44060
(440) 602-4700

SCALE: 1/2
DATE: 11-26-13
DRW BY: CRT
CHK BY:05/17/2024-SEM
APPR BY:

CODER MOUNT SMARTDATE

MAT'L

21928-621

SHEET 2 OF 2

**ASSEMBLY TITLE:** **Q65 PEEL PLATE ASSEMBLY**

**DRAWING NO.:** **C20812-000**

**GENERAL FUNCTION:**

- The peel plate separates the label from the liner and puts the label in a “Flag" position.
- The mounting rods support the slot sensor assembly.
- The guide collars and the idler roller guide the web position over the peel plate
- The pivot pin provides for yoke mounting of the labeling head.

**SET UP AND ADJUSTMENTS:**

- On machines so equipped, the peel plate may be pivoted at various angles relating to the product by loosening the peel plate mounting bar. (The peel plate of all other models is mounted at a fixed angle and cannot be adjusted)
- To advance label flag on peel plate, move the slot sensor towards the peel plate. To decrease label flag, move slot sensor away from the peel plate.
- Position guide collars on idler roll, one slightly above and the other slightly below the web.

**MAINTENANCE:**

- Clean all the parts that may acquire labels or glue residue.

**TROUBLESHOOTING**:

| PROBLEM | WHAT TO DO |
|---|---|
| - Too much label flag at peel | - Move slot sensor away from peel plate edge. |
| - Too little label flag at peel | - Move slot sensor towards peel plate edge |
| - Web moving up and down peel plate | - Make sure guide collars are properly positioned on idler roll. |

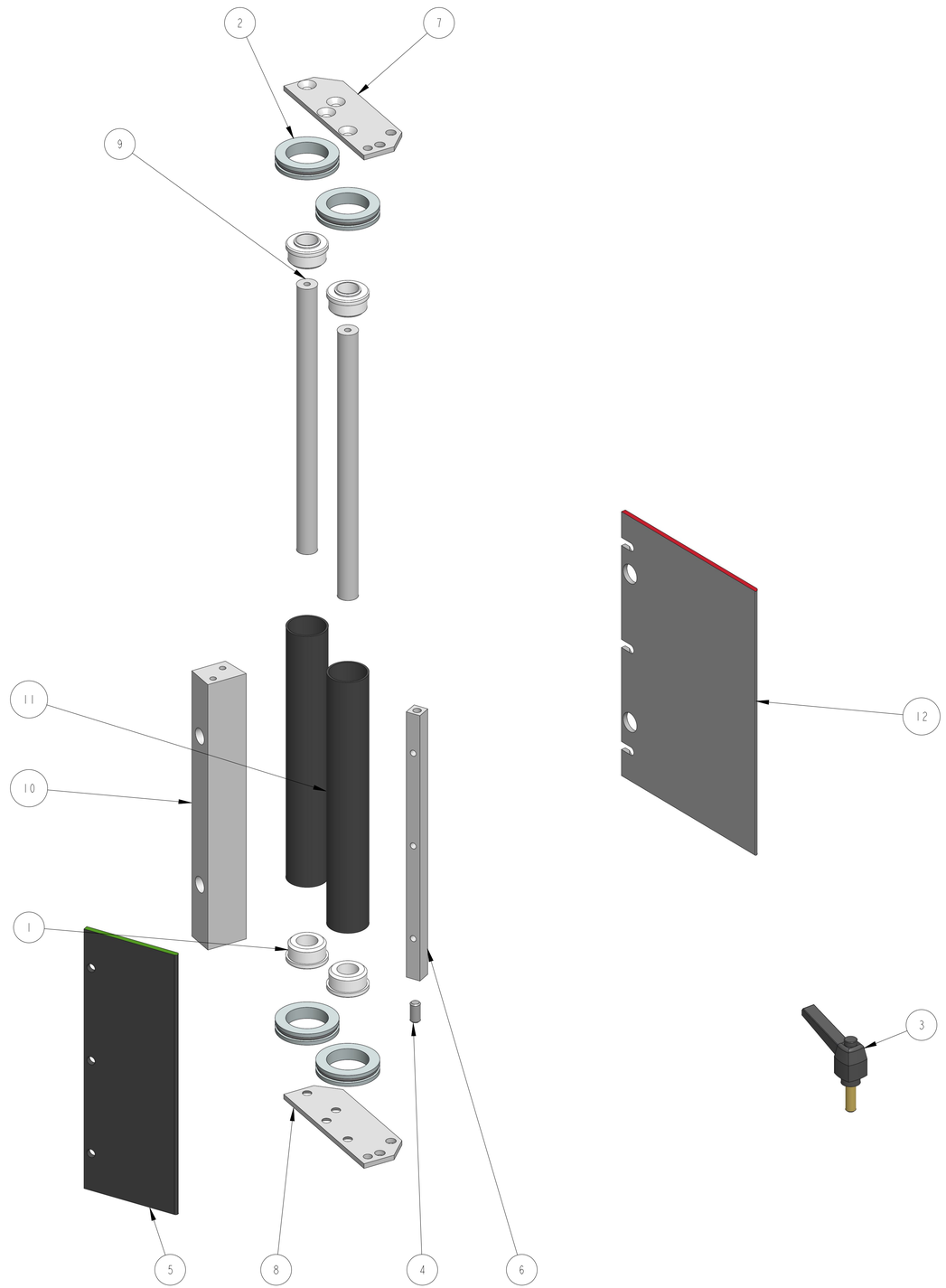


| ITEM | QTY | PART NO. | DESCRIPTION | PARENT ITEM |
|---|---|---|---|---|
| 1 | 4 | 181063-000 | BEARING, ROLL END | 21397-000 |
| 2 | 4 | 361198-000 | COLLAR, GUIDE, 1" ID | 21397-000 |
| 3 | 1 | 801857-000 | ADJUSTABLE HANDLE | 21397-000 |
| 4 | 1 | 871369-000 | DOWEL PIN, 1/4 DIA X 1/2 LONG | 21397-000 |
| 5 | 1 | A21175-000 | PRESSURE SHOE (7" WRAP) | 21397-000 |
| 6 | 1 | A21756-000 | PRESSURE SHOE MOUNTING BAR - 7" | 21397-000 |
| 7 | 1 | A21758-000 | SIDE PLATE | 21397-000 |
| 8 | 1 | A21758-001 | SIDE PLATE | 21397-000 |
| 9 | 2 | A23791-002 | SHAFT, IDLER ROLLER | 21397-000 |
| 10 | 1 | B20491-000 | PEEL PLATE MTG. BAR - 7" WRAP | 21397-000 |
| 11 | 2 | B21198-001 | 7" WEB IDLER ROLLER-( PEEL PLATE) | 21397-000 |
| 12 | 1 | B21199-001 | PEEL PLATE, 7" | 21397-000 |

| REV | DATE | DESCRIPTION | BY |
|---|---|---|---|
| A | 05/13/24 | NEW DRAWING | SEM |

THIS IS A PRO-ENGINEER DOCUMENT AND MAY NOT BE MODIFIED MANUALLY

UNLESS OTHERWISE SPECIFIED
DIMENSIONAL TOLERANCE
X ± .1
XX ± .01
XXX ± .005
ANGLES ± 30'

SURFACE FINISH 125
BREAK ALL EDGES .005/.015
CORNER RADIUS .010/.030
ALL ANGLES ARE 90°

QUADREL LABELING SYSTEMS
7670 JENTHER DRIVE
MENTOR, OHIO 44060
(440) 602-4700

SCALE: 5/8
DATE: 05/13/2024
DRW BY: SEM
CHK BY:05/13/2024-SEM
APPR BY:

7" PEEL PLATE ASSEMBLY QD

MAT'L

21397-000

SHEET 1 OF 2

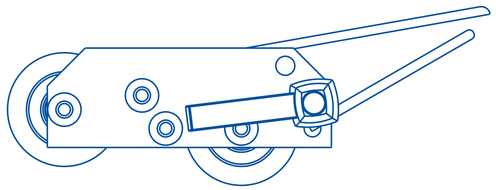

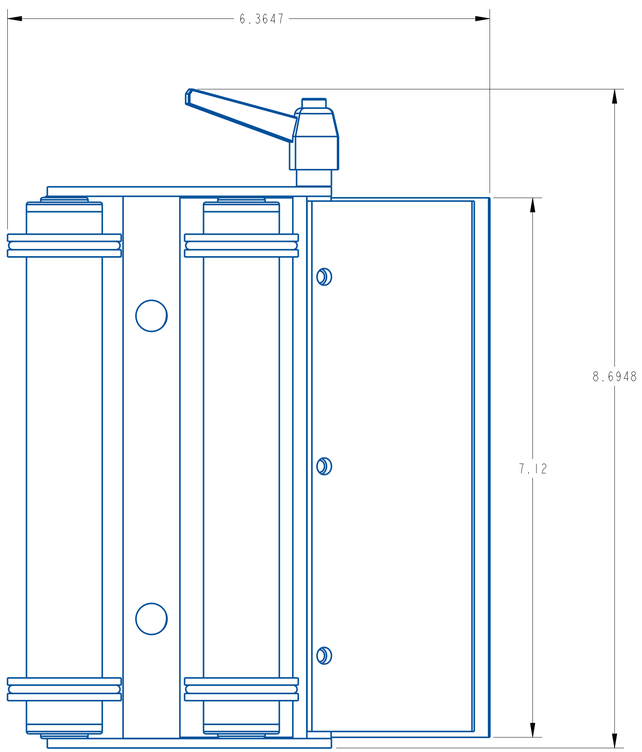


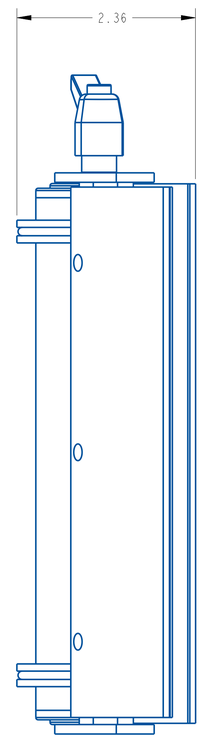


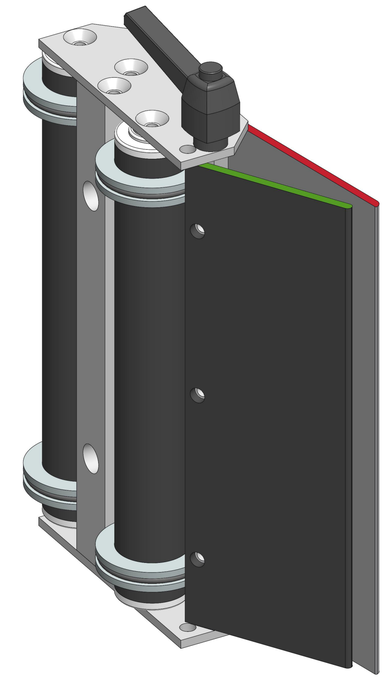

| REV | DATE | DESCRIPTION | BYE |
|---|---|---|---|
| A | 05/13/24 | NEW DRAWING | SEM |

THIS IS A PRO-ENGINEER DOCUMENT AND MAY NOT BE MODIFIED MANUALLY

UNLESS OTHERWISE SPECIFIED
DIMENSIONAL TOLERANCE
.X ± .1
.XX ± .01
.XXX ± .005
ANGLES ± 30'
SURFACE FINISH 125
BREAK ALL EDGES .005/.015
CORNER RADIUS .010/.030"
ALL ANGLES ARE 90°

QUADREL LABELING SYSTEMS
7670 JENTHER DRIVE
MENTOR, OHIO 44060
(440) 602-4700

SCALE: 1/1
DATE: 05/13/24
DRW BY: SEM
CHK BY:05/13/2024-SEM
APPR BY:

7" PEEL PLATE ASSEMBLY QD

MAT'L

21397-000

SHEET 2 OF 2

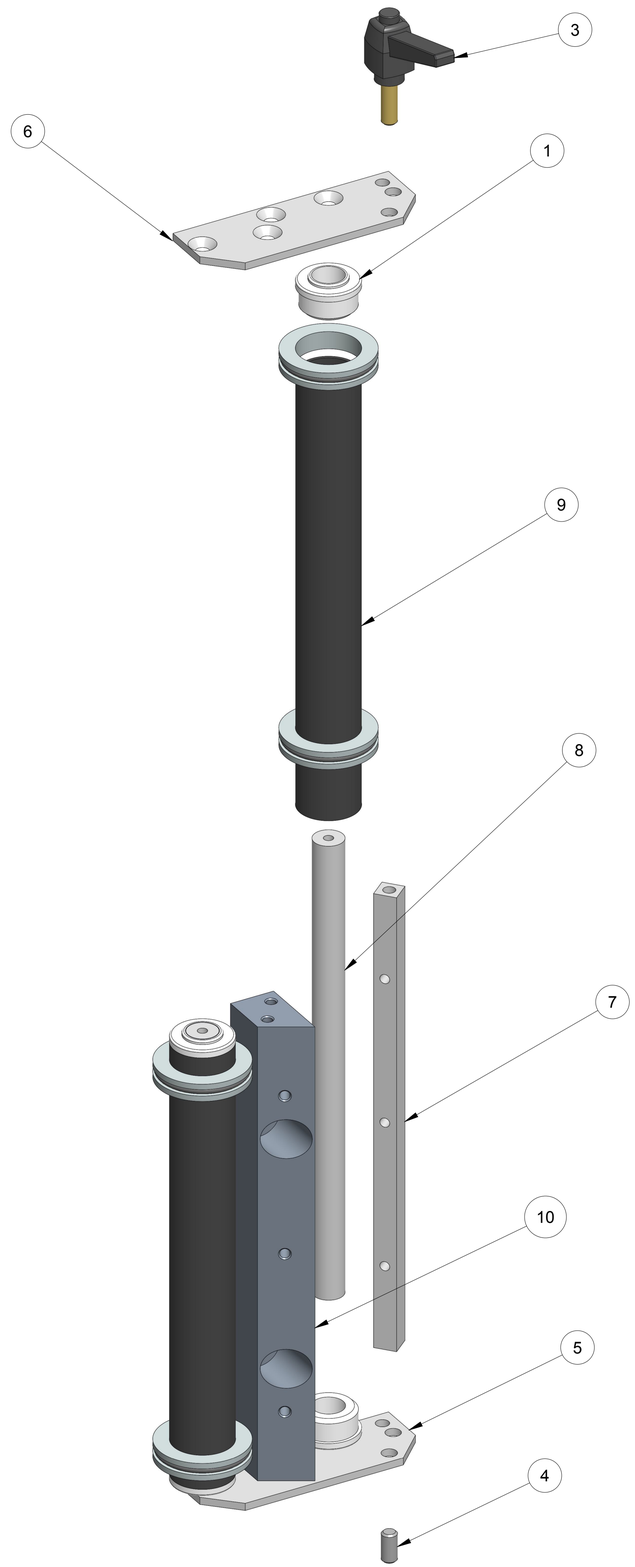


| ITEM | QTY | PART NO. | DESCRIPTION | PARENT ITEM |
|---|---|---|---|---|
| 1 | 4 | 181063-000 | BEARING, ROLL END | 21343PP-00R |
| 2 | 4 | 361198-000 | COLLAR, GUIDE, 1" ID | 21343PP-00R |
| 3 | 1 | 801857-000 | ADJUSTABLE HANDLE | 21343PP-00R |
| 4 | 1 | 871369-000 | DOWEL PIN, 1/4 DIA X 1/2 LONG | 21343PP-00R |
| 5 | 1 | A21758-000 | SIDE PLATE | 21343PP-00R |
| 6 | 1 | A21758-001 | SIDE PLATE | 21343PP-00R |
| 7 | 1 | A22245-000 | PRESSURE SHOE MOUNTING BAR - 7" | 21343PP-00R |
| 8 | 2 | A23791-003 | SHAFT, IDLER ROLLER | 21343PP-00R |
| 9 | 2 | B21198-003 | IDLER ROLLER-( PEEL PLATE) | 21343PP-00R |
| 10 | 1 | B7639-000 | | 21343PP-00R |

NOT SHOWN:

B21199-001 PEEL PLATE
A21372-000 PRESSURE SHOE
791852-000 PEEL PLATE TAPE

| REV | DATE | DESCRIPTION |
|---|---|---|
| A | 05-FEB-2024 | NEW DRAWING |

THIS IS A PRO-ENGINEER DOCUMENT AND MAY NOT BE MODIFIED MANUALLY

UNLESS OTHERWISE SPECIFIED
DIMENSIONAL TOLERANCE
X ± .1
XX ± .01
XXX ± .005
ANGLES ± 30°

SURFACE FINISH 125
BREAK ALL EDGES .005/.015
CORNER RADIUS .010/.030

QUADREL LABELING SYSTEMS
7670 JENTHER DRIVE
MENTOR, OHIO 44060
(440) 602-4700

SCALE: 0.875
DATE: 05-FEB-2024
DRW BY: CRT
CHK BY:03/07/2024-SEM
APPR BY:

7" PEEL PLATE ASSEMBLY

MAT'L

21343PP-00R

SHEET 1 OF 2

| ITEM | QTY | PART NO. | DESCRIPTION | PARENT ITEM |
|---|---|---|---|---|
| 1 | 4 | 181063-000 | BEARING, ROLL END | 21343PP-00R |
| 2 | 4 | 361198-000 | COLLAR, GUIDE, 1" ID | 21343PP-00R |
| 3 | 1 | 801857-000 | ADJUSTABLE HANDLE | 21343PP-00R |
| 4 | 1 | 871369-000 | DOWEL PIN, 1/4 DIA X 1/2 LONG | 21343PP-00R |
| 5 | 1 | A21758-000 | SIDE PLATE | 21343PP-00R |
| 6 | 1 | A21758-001 | SIDE PLATE | 21343PP-00R |
| 7 | 1 | A22245-000 | PRESSURE SHOE MOUNTING BAR - 7" | 21343PP-00R |
| 8 | 2 | A23791-003 | SHAFT, IDLER ROLLER | 21343PP-00R |
| 9 | 2 | B21198-003 | IDLER ROLLER-( PEEL PLATE) | 21343PP-00R |
| 10 | 1 | B7639-000 | | 21343PP-00R |

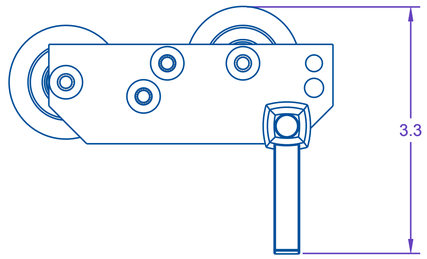


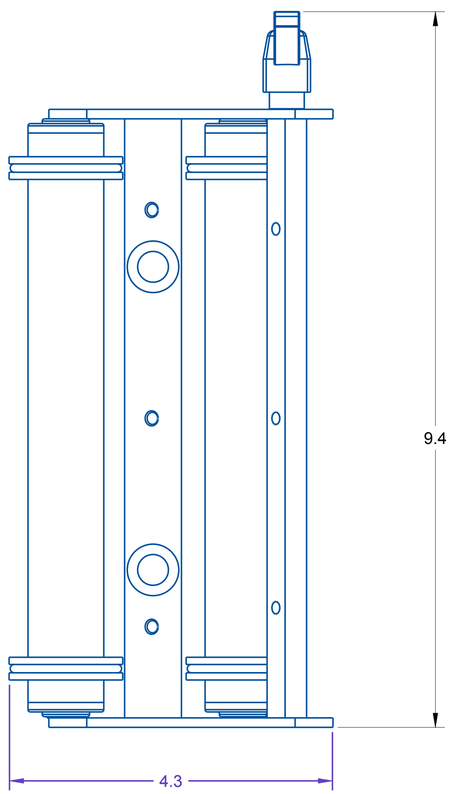


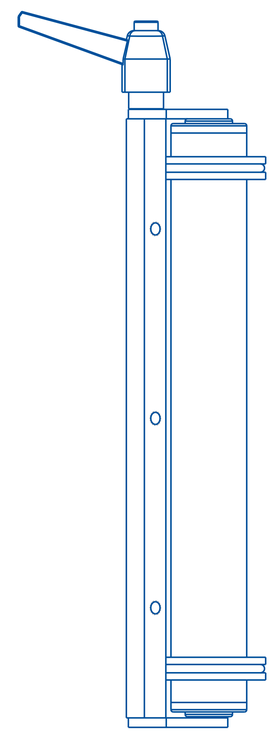

| REV | DATE | DESCRIPTION |
|---|---|---|
| A | 05-FEB-2024 | NEW DRAWING |

THIS IS A PRO-ENGINEER DOCUMENT AND MAY NOT BE MODIFIED MANUALLY

UNLESS OTHERWISE SPECIFIED
DIMENSIONAL TOLERANCE
.X ± .1
.XX ± .01
.XXX ± .005
ANGLES ± 30'

SURFACE FINISH 125
BREAK ALL EDGES .005/.015
CORNER RADIUS .0107.030

QUADREL LABELING SYSTEMS
7670 JENTHER DRIVE
MENTOR, OHIO 44060
(440) 602-4700

SCALE: 1.000
DATE: 05-FEB-2024
DRW BY: CRT
CHK BY:03/07/2024-SEM
APPR BY:

7" PEEL PLATE ASSEMBLY

MAT'L

21343PP-00R

SHEET 2 OF 2

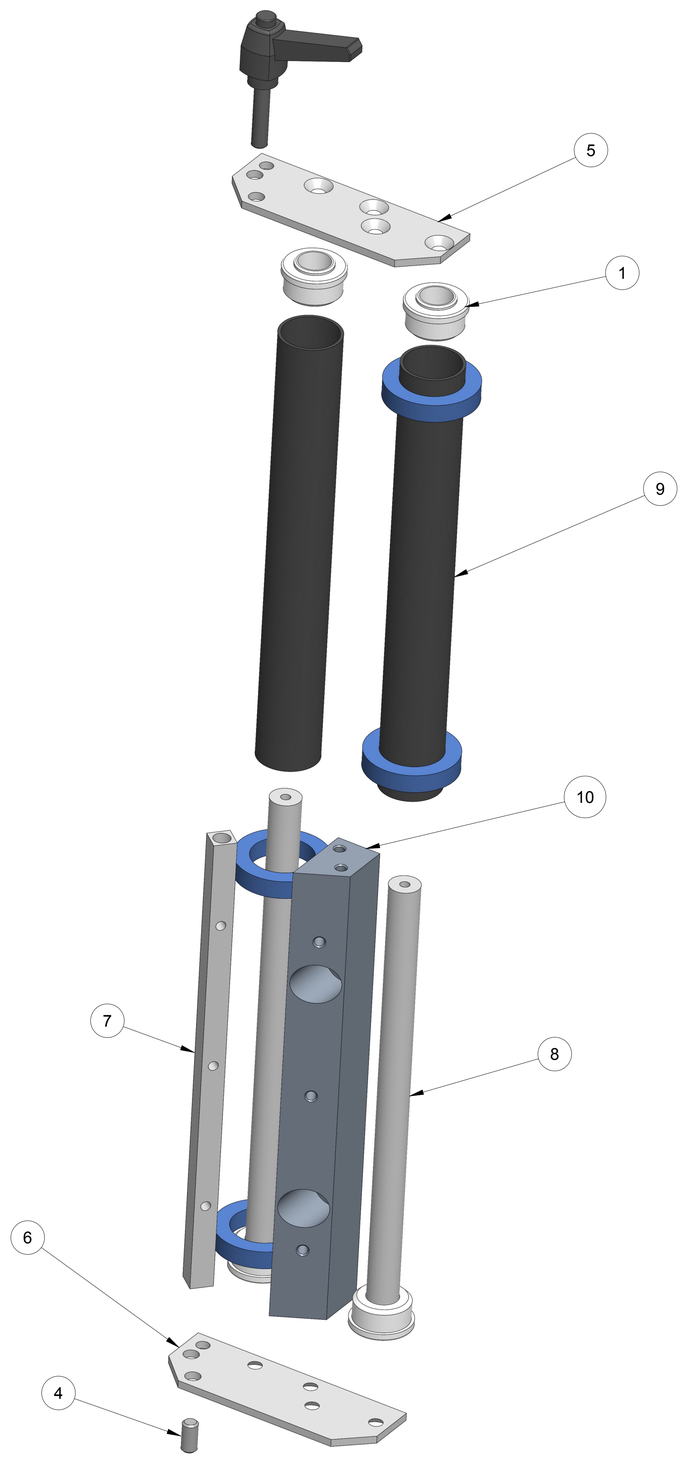


| ITEM | QTY | PART NO. | DESCRIPTION | PARENT ITEM |
|---|---|---|---|---|
| 1 | 4 | 181063-000 | BEARING, ROLL END | 21343PP-00L |
| 2 | 1 | 22811-000 | HANDLE ASSEMBLY, LEFT HANDED | 21343PP-00L |
| 3 | 4 | 361198-000 | COLLAR, GUIDE, 1" ID | 21343PP-00L |
| 4 | 1 | 871369-000 | DOWEL PIN, 1/4 DIA X 1/2 LONG | 21343PP-00L |
| 5 | 1 | A21758-000 | SIDE PLATE | 21343PP-00L |
| 6 | 1 | A21758-001 | SIDE PLATE | 21343PP-00L |
| 7 | 1 | A22245-002 | PRESSURE SHOE MOUNTING BAR - 7" | 21343PP-00L |
| 8 | 2 | A23791-003 | SHAFT, IDLER ROLLER | 21343PP-00L |
| 9 | 2 | B21198-003 | IDLER ROLLER-( PEEL PLATE) | 21343PP-00L |
| 10 | 1 | B7639-000 | | 21343PP-00L |

NOT SHOWN:

B21199-001 PEEL PLATE
A21372-000 PRESSURE SHOE
791852-000 PEEL PLATE TAPE

| REV | DATE | DESCRIPTION |
|---|---|---|
| A | 05-FEB-2024 | NEW DRAWING |

THIS IS A PRO-ENGINEER DOCUMENT AND MAY NOT BE MODIFIED MANUALLY

UNLESS OTHERWISE SPECIFIED
DIMENSIONAL TOLERANCE
X ± .1
XX ± .01
XXX ± .005
ANGLES ± 30°

SURFACE FINISH 125
BREAK ALL EDGES .005/.015
CORNER RADIUS .010/.030

QUADREL LABELING SYSTEMS
7670 JENTHER DRIVE
MENTOR, OHIO 44060
(440) 602-4700

SCALE: 0.875
DATE: 05-FEB-2024
DRW BY: CRT
CHK BY:03/07/2024-SEM
APPR BY:

7" PEEL PLATE ASSEMBLY

MAT'L

21343PP-00L

SHEET 1 OF 2

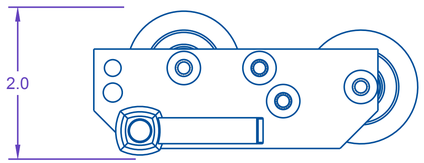


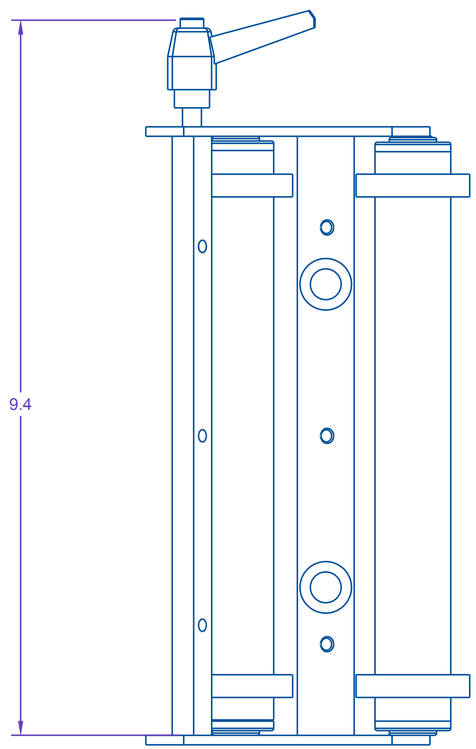


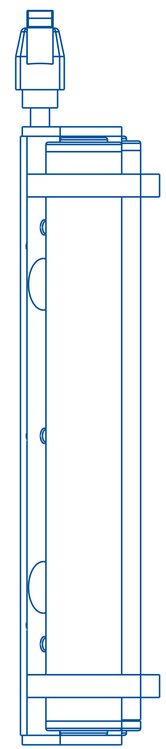

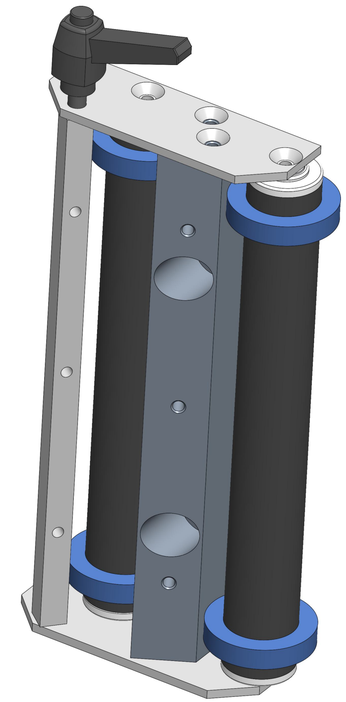

| REV | DATE | DESCRIPTION | BY |
|---|---|---|---|
| A | 2-5-24 | NEW DRAWING | CRT |

THIS IS A PRO-ENGINEER DOCUMENT AND MAY NOT BE MODIFIED MANUALLY

UNLESS OTHERWISE SPECIFIED
DIMENSIONAL TOLERANCE
.X ± .1
.XX ± .01
.XXX ± .005
ANGLES ± 30'

SURFACE FINISH 125
BREAK ALL EDGES .005/.015
CORNER RADIUS .010/.030
ALL ANGLES ARE 90°

QUADREL LABELING SYSTEMS
7670 JENTHER DRIVE
MENTOR, OHIO 44060
(440) 602-4700

| | |
|---|---|
| SCALE: | 1.000 |
| DATE: | 05-FEB-2024 |
| DRW BY: | CRT |
| CHK BY: | &CREO_CHK |
| APPR BY: | |

7" PEEL PLATE ASSEMBLY

MAT'L

21343PP-00L

SHEET 2 OF 2

| ITEM | QTY | PART NO. | DESCRIPTION | PARENT ITEM |
|---|---|---|---|---|
| 1 | 1 | 801899-000 | HANDLE | 22811-000 |
| 2 | 1 | 841812-000 | STUD | 22811-000 |

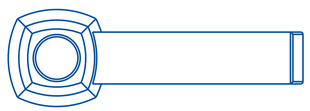

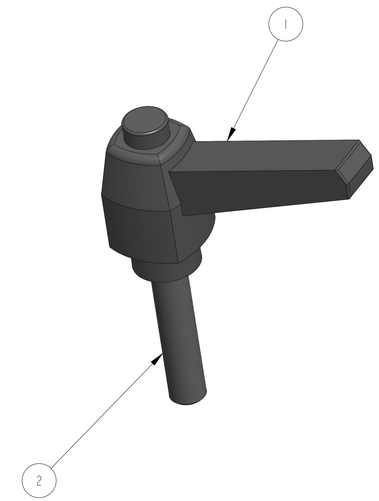


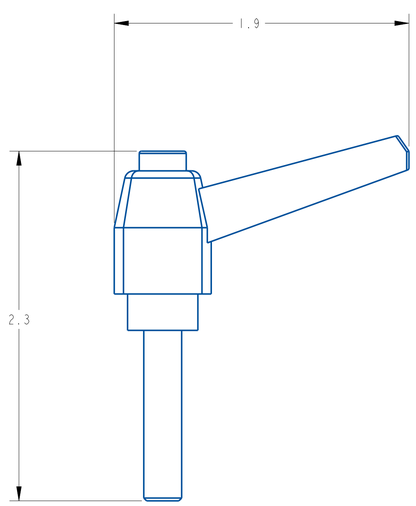


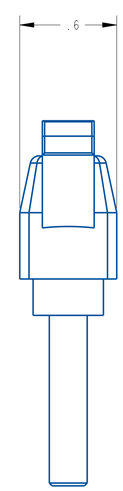


| REV | DATE | DESCRIPTION | BY |
|---|---|---|---|
| A | Feb-05-24 | NEW DRAWING | CRT |

THIS IS A PRO-ENGINEER DOCUMENT AND MAY NOT BE MODIFIED MANUALLY

UNLESS OTHERWISE SPECIFIED
DIMENSIONAL TOLERANCE
.X ± .1
.XX ± .01
.XXX ± .005
ANGLES ± 30°

SURFACE FINISH 125
BREAK ALL EDGES .005/.015
CORNER RADIUS .010/.030

QUADREL LABELING SYSTEMS
7670 JENTHER DRIVE
MENTOR, OHIO 44060
(440) 602-4700

SCALE: 2/1
DATE: Feb-05-24
DRW BY: CRT
CHK BY:
APPR BY:

HANDLE ASSEMBLY, LEFT HANDED THREAD

MAT'L

22811-000

SHEET 1 OF 1

**ASSEMBLY TITLE:** **FIXED BRUSH IMPRESSER**

**DRAWING NO.:** **D21651-000**

**GENERAL FUNCTION:**

-The fixed roller impresser is an option used in applications where a secondary wipe down or label wipe is necessary.

**SET UP AND ADJUSTMENTS:**

- When installed, the brush assembly will be mounted by an adjustable clamp. The mounting assembly is fastener to the option rail located on the peel plate side wall.
- Four axis of adjustment is available by loosening the set screw locking the roller arm in place.
- Locate the brush as necessary and re-tighten the clamping screws.
- Run a product through the brush area and insure the brush layed on the product but do not impede product travel. The brush can be adjusted too close to the product which will prevent the product from smoothly traversing through the brush area.

**MAINTENANCE:**

- Keep the brush free of label flash, glue and debris. This will prevent jamming and web tears.

**NOTE:** Exercise caution when removing bad labels from brush. Careless removal can result in brisals being pull out which may leave the labeler inoperable until the brush is replaced!

**TROUBLESHOOTING**:

| PROBLEM | WHAT TO DO |
|---|---|
| - Product jams at brush area | - Increase brush spacing. |
| - Bubbles in label | - Decrease labeling speed |
| - Label edge curling | - Decrease product delay |
| - Wipedown inadequate | - Decrease brush spacing. |

| ITEM | QTY | PART NO. | DESCRIPTION | PARENT ITEM |
|---|---|---|---|---|
| 1 | 1 | A21264-004 | CROSS ARM | 10228-009 |
| 2 | 1 | A21693-300 | IMPRESSOR MOUNTING BLOCK | 10228-009 |
| 3 | 1 | A21758-300 | PEEL PLATE SIDE PLATE .375"THK | 10228-009 |
| 4 | 1 | A23463-100 | BRUSH HOLDER | 10228-009 |

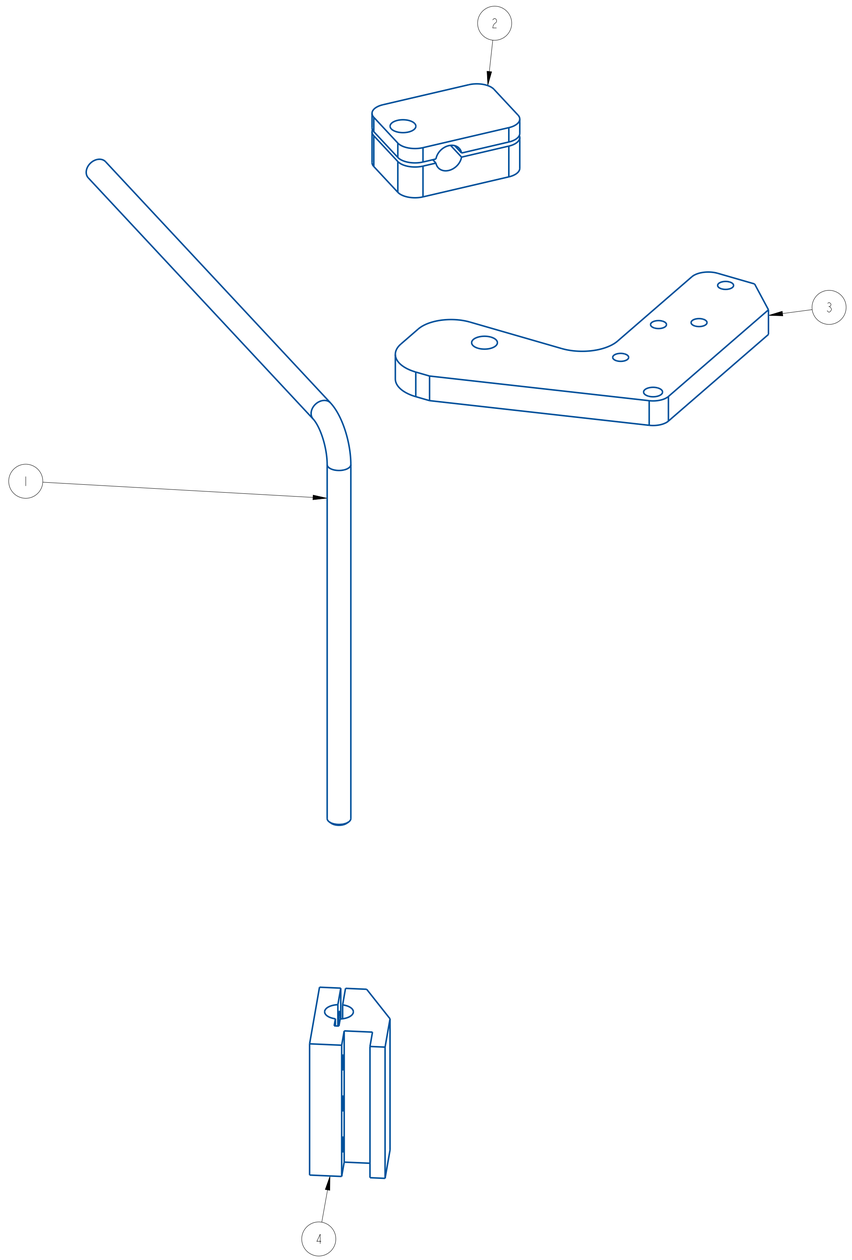


| REV | DATE | DESCRIPTION | BY |
|---|---|---|---|
| A | Oct-11-24 | NEW DRAWING | TAZ |

THIS IS A PRO-ENGINEER DOCUMENT AND MAY NOT BE MODIFIED MANUALLY

UNLESS OTHERWISE SPECIFIED
DIMENSIONAL TOLERANCE
X ± .1
XX ± .01
XXX ± .005
ANGLES ± 30'

SURFACE FINISH 125
BREAK ALL EDGES .005/.015
CORNER RADIUS .010/.030
ALL ANGLES ARE 90°

QUADREL LABELING SYSTEMS
7670 JENTHER DRIVE
MENTOR, OHIO 44060
(440) 602-4700

SCALE: 1/1
DATE: Oct-11-24
DRW BY: TAZ
CHK BY: 10/11/2024-SEM
APPR BY:

HEAVY DUTY BRUSH IMPRESSOR 4 1/2"

MAT'L

10228-009

SHEET 1 OF 2

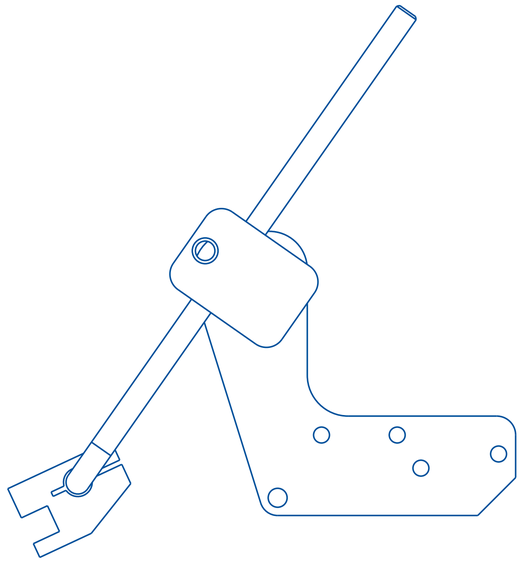

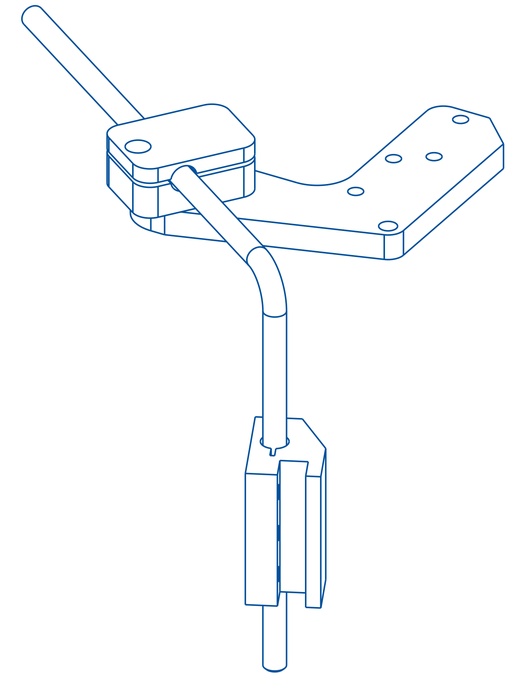

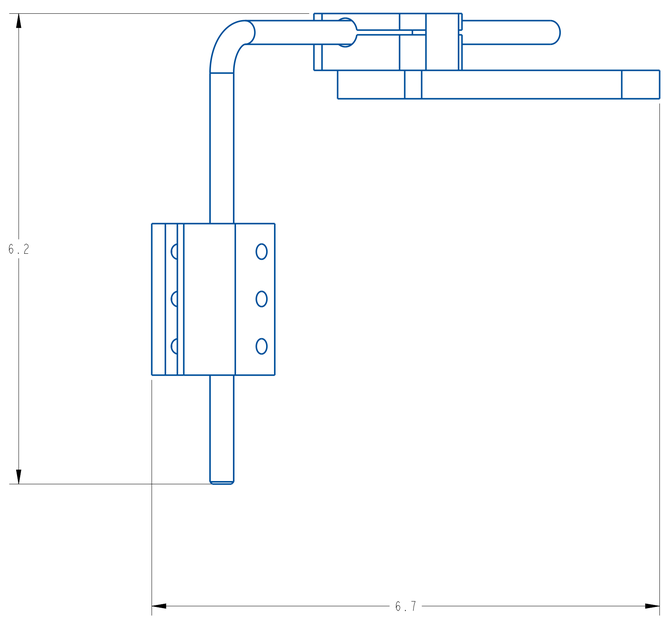


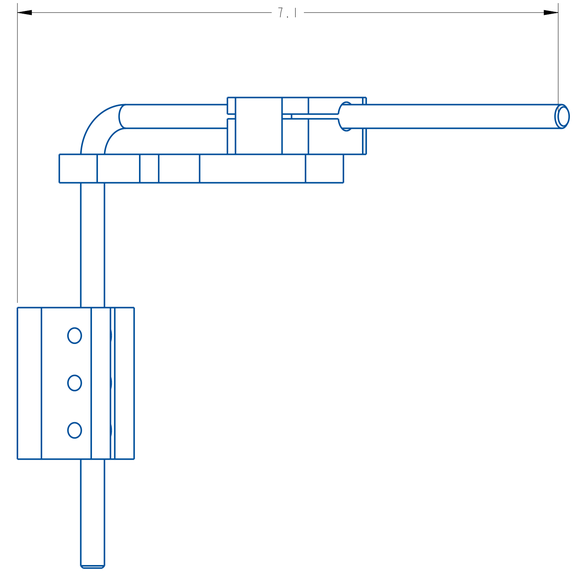


| REV | DATE | DESCRIPTION | BY |
|---|---|---|---|
| A | Oct-11-24 | NEW DRAWING | TAZ |

THIS IS A PRO-ENGINEER DOCUMENT AND MAY NOT BE MODIFIED MANUALLY

UNLESS OTHERWISE SPECIFIED
DIMENSIONAL TOLERANCE
X ± .1
XX ± .01
XXX ± .005
ANGLES ± 30'

SURFACE FINISH 125
BREAK ALL EDGES .005/.015
CORNER RADIUS .010/.030
ALL ANGLES ARE 90°

QUADREL LABELING SYSTEMS
7670 JENTHER DRIVE
MENTOR, OHIO 44060
(440) 602-4700

SCALE: 1/1
DATE: Oct-11-24
DRW BY: TAZ
CHK BY: 10/11/2024-SEM
APPR BY:

HEAVY DUTY BRUSH IMPRESSOR 4 1/2"

MAT'L

10228-009

SHEET 2 OF 2

**ASSEMBLY TITLE:** **Q65 DRIVE AND PINCH ROLL ASSEMBLY**

**GENERAL FUNCTION:**

- The drive roll pulls the liner through the entire labeling head. As the liner is pulled over the peel edge, the label dispenses
- The drive roll pulls the liner through the entire labeling head. As the liner is pulled over the peel edge, the label dispenses.
- The spring-loaded pinch roll squeezes the liner against the drive roll to provide positive drive
- The primary roll is the pull or drive roll as shown. The knurl roll provides a constant pressure against the pull roll.

**SET UP AND ADJUSTMENTS:**

- When threading the labeling head, use the pinch roll lever to release the pinch roll from the drive roll.
- Use the spring plunger adjustment screws to adjust the contact pressure. between the knurl and pull rollers.
- The pressure should be adjusted as tight as necessary to prevent a loose liner, while still allowing full rotation of the pressure release arm.

**MAINTENANCE**:

- Clean all parts that may have acquired label or glue residue

**TROUBLESHOOTING**:

| PROBLEM | WHAT TO DO |
|---|---|
| - Meter pulley rubbing against side plate | - Center pulley on motor shaft and tighten two (2) set scr in pulley. |
| - Web slips | - Drive roller not closed. Turn drive roll arm to closed position. |
| - Drive roll not rotating when stepping motor rotates | - Replace timing belt from motor to drive roll |
| - Pinch roll not providing enough pressure against drive roll | - Replace pinch roll spring<br>- Increase tension on drive roll by adjusting spring loaded locking pins. |
| - Drive roll unevenly worn causing tracking problem | - Replace drive roll |

| ITEM | QTY | PART NO. | DESCRIPTION | PARENT ITEM |
|---|---|---|---|---|
| 1 | 2 | 00301-17 | SPRING, .275 x .052 x .94 | 23100DR-007RH |
| 2 | 2 | 111052-000 | BEARING | 23100DR-007RH |
| 3 | 2 | 111072-000 | BEARING, BALL | 23100DR-007RH |
| 4 | 2 | 151004-000 | BEARING, THRUST WASHER | 23100DR-007RH |
| 5 | 1 | 362161-000 | COLLAR, SETSCREW, 1/2 IN. ID | 23100DR-007RH |
| 6 | 2 | A20567-000 | WHITE NYLON SLUG | 23100DR-007RH |
| 7 | 1 | A21750-000 | PINCH POINT GUARD ROD | 23100DR-007RH |
| 8 | 1 | A23125-000 | SPACER | 23100DR-007RH |
| 9 | 1 | A23751-000 | SPACER | 23100DR-007RH |
| 10 | 1 | A23752-000 | SPACER | 23100DR-007RH |
| 11 | 1 | A25249-000 | INDEX DOT | 23100DR-007RH |
| 12 | 1 | A25250-000 | IND KNOB | 23100DR-007RH |
| 13 | 1 | B20125-001 | KNURLED ROLL SHAFT, | 23100DR-007RH |
| 14 | 1 | B20126-001 | KNURLED ROLL | 23100DR-007RH |
| 15 | 1 | B20137-002 | PULL ROLL, 7" | 23100DR-007RH |
| 16 | 1 | B21614-000 | YOKE OUTSIDE PLATE | 23100DR-007RH |
| 17 | 1 | B21615-000 | YOKE INSIDE PLATE | 23100DR-007RH |
| 18 | 1 | B21616-001 | YOKE FILLER BAR | 23100DR-007RH |

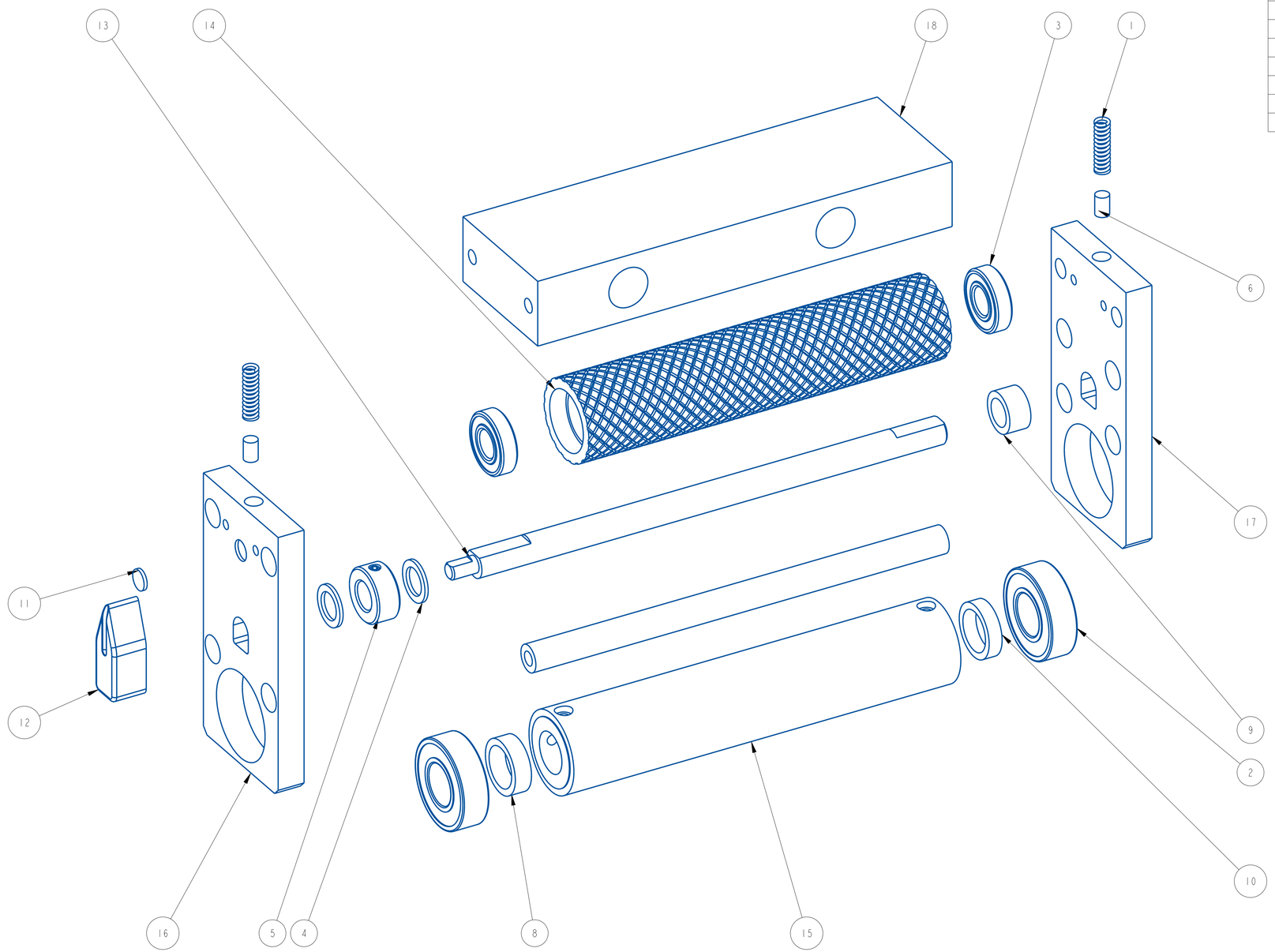


| REV | DATE | DESCRIPTION | BY |
|---|---|---|---|
| A | 10/13/25 | NEW DRAWING | RDL |

THIS IS A PRO-ENGINEER DOCUMENT AND MAY NOT BE MODIFIED MANUALLY

UNLESS OTHERWISE SPECIFIED
DIMENSIONAL TOLERANCE
.X ± .1
.XX ± .01
.XXX ± .005
ANGLES ± 30'

SURFACE FINISH 125
BREAK ALL EDGES .005/.015
CORNER RADIUS .010/.030

QUADREL LABELING SYSTEMS
7670 JENTHER DRIVE
MENTOR, OHIO 44060
(440) 602-4700

SCALE: 1/1
DATE: 10/13/25
DRW BY: RDL
CHK BY: 10/13/2025-SEM
APPR BY:

DRIVE ASSEMBLY, 7" LHH

MAT'L

23100DR-007RH

SHEET 1 OF 2

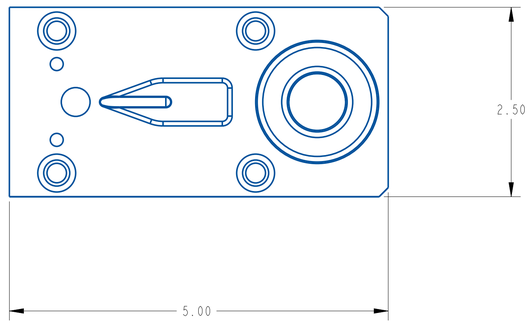


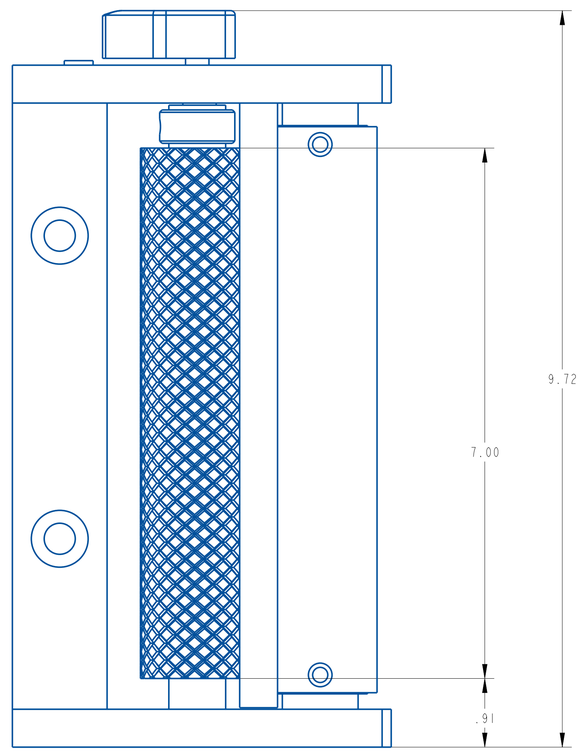


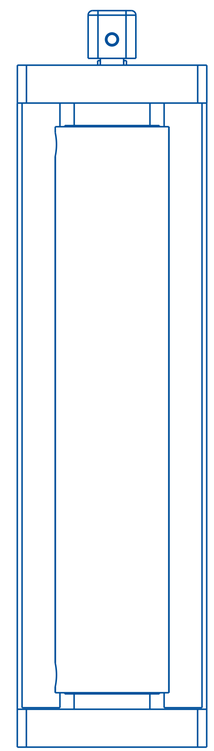

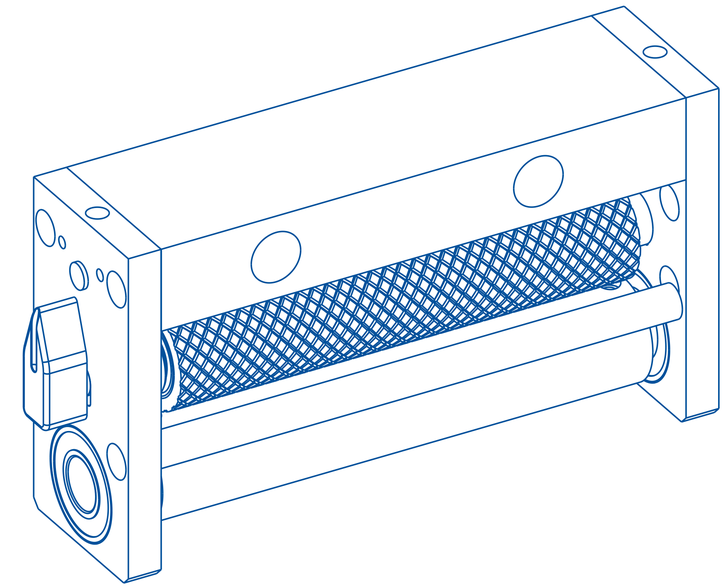

| REV | DATE | DESCRIPTION | BY |
|---|---|---|---|
| A | 10/05/25 | NEW DRAWING | RDL |

THIS IS A PRO-ENGINEER DOCUMENT AND MAY NOT BE MODIFIED MANUALLY

UNLESS OTHERWISE SPECIFIED
DIMENSIONAL TOLERANCE
.X ± .1
.XX ± .01
.XXX ± .005
ANGLES ± 30'
SURFACE FINISH 125
BREAK ALL EDGES .005/.015
CORNER RADIUS .010/.030"
ALL ANGLES ARE 90°

QUADREL LABELING SYSTEMS
7670 JENTHER DRIVE
MENTOR, OHIO 44060
(440) 602-4700

SCALE: 1/1
DATE: 05-OCT-15
DRW BY: RDL
CHK BY: 10/13/2025-SEM
APPR BY:

DRIVE ASSEMBLY, 7" LHH

MAT'L

23100DR-007RH

SHEET 2 OF 2

| ITEM | QTY | PART NO. | DESCRIPTION | PARENT ITEM |
|---|---|---|---|---|
| 1 | 2 | 00301-17 | SPRING, .275 x .052 x .94 | 23100DR-007LH |
| 2 | 2 | 111052-000 | BEARING | 23100DR-007LH |
| 3 | 2 | 111072-000 | BEARING, BALL | 23100DR-007LH |
| 4 | 2 | 151004-000 | BEARING, THRUST WASHER | 23100DR-007LH |
| 5 | 1 | 362161-000 | COLLAR, SETSCREW, 1/2 IN. ID | 23100DR-007LH |
| 6 | 2 | A20567-000 | WHITE NYLON SLUG | 23100DR-007LH |
| 7 | 1 | A21750-000 | PINCH POINT GUARD ROD | 23100DR-007LH |
| 8 | 1 | A23125-000 | SPACER | 23100DR-007LH |
| 9 | 1 | A23751-000 | SPACER | 23100DR-007LH |
| 10 | 1 | A23752-000 | SPACER | 23100DR-007LH |
| 11 | 1 | A25249-000 | INDEX DOT | 23100DR-007LH |
| 12 | 1 | A25250-000 | IND KNOB | 23100DR-007LH |
| 13 | 1 | B20125-001 | KNURLED ROLL SHAFT, | 23100DR-007LH |
| 14 | 1 | B20126-001 | KNURLED ROLL | 23100DR-007LH |
| 15 | 1 | B20137-002 | PULL ROLL, 7" | 23100DR-007LH |
| 16 | 1 | B21614-000 | YOKE OUTSIDE PLATE | 23100DR-007LH |
| 17 | 1 | B21615-000 | YOKE INSIDE PLATE | 23100DR-007LH |
| 18 | 1 | B21616-001 | YOKE FILLER BAR | 23100DR-007LH |

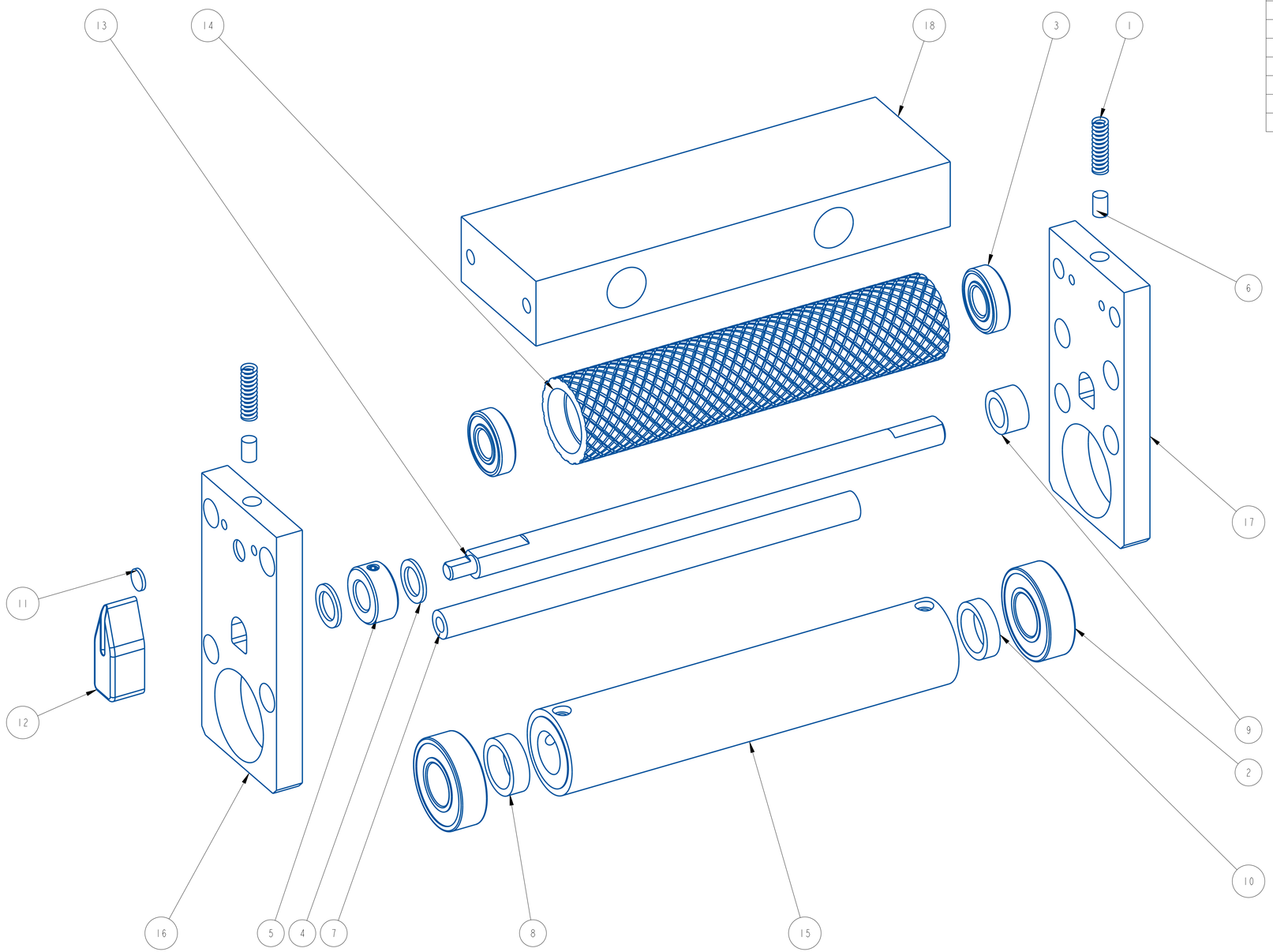


| REV | DATE | DESCRIPTION | BY |
|---|---|---|---|
| A | 10/13/25 | NEW DRAWING | RDL |

THIS IS A PRO-ENGINEER DOCUMENT AND MAY NOT BE MODIFIED MANUALLY

UNLESS OTHERWISE SPECIFIED
DIMENSIONAL TOLERANCE
.X ± .1
.XX ± .01
.XXX ± .005
ANGLES ± 30'

SURFACE FINISH 125
BREAK ALL EDGES .005/.015
CORNER RADIUS .010/.030

QUADREL LABELING SYSTEMS
7670 JENTHER DRIVE
MENTOR, OHIO 44060
(440) 602-4700

SCALE: 1/1
DATE: 10/13/25
DRW BY: RDL
CHK BY: 10/13/2025-SEM
APPR BY:

DRIVE ASSEMBLY, 7" LHH

MAT'L

23100DR-007LH

SHEET 1 OF 2

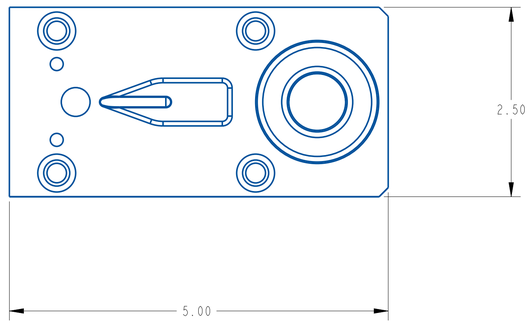


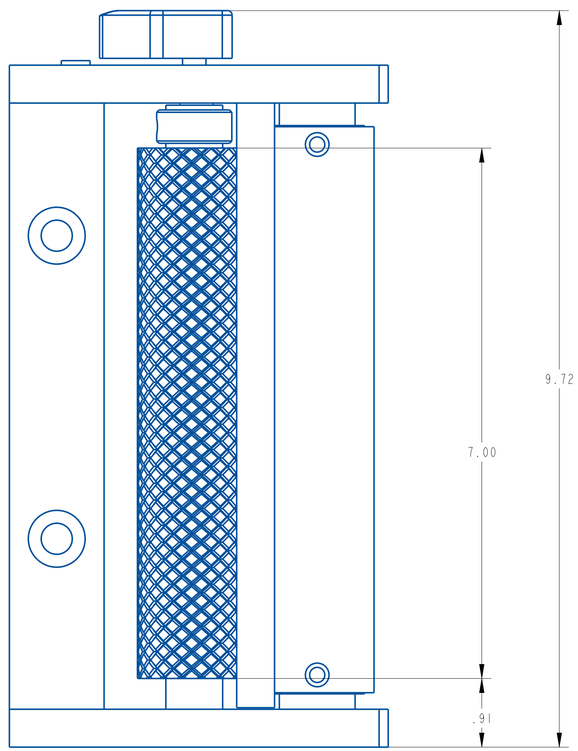


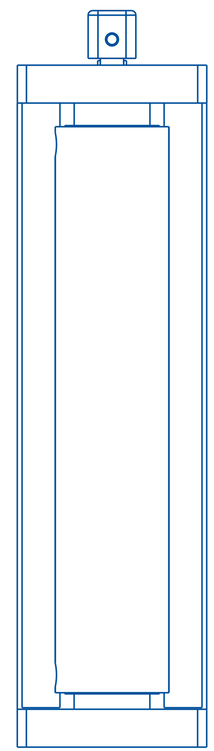

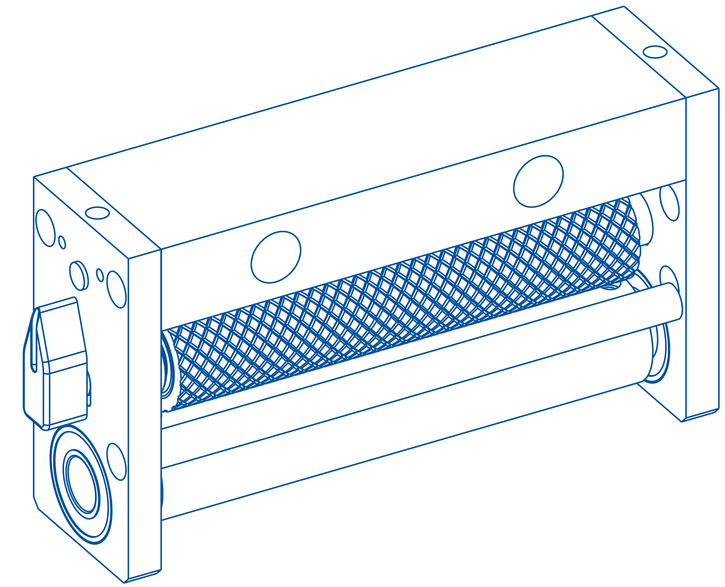

| REV | DATE | DESCRIPTION | BY |
|---|---|---|---|
| A | 10/05/25 | NEW DRAWING | RDL |

THIS IS A PRO-ENGINEER DOCUMENT AND MAY NOT BE MODIFIED MANUALLY

UNLESS OTHERWISE SPECIFIED
DIMENSIONAL TOLERANCE
.X ± .1
.XX ± .01
.XXX ± .005
ANGLES ± 30'
SURFACE FINISH 125
BREAK ALL EDGES .005/.015
CORNER RADIUS .010/.030"
ALL ANGLES ARE 90°

QUADREL LABELING SYSTEMS
7670 JENTHER DRIVE
MENTOR, OHIO 44060
(440) 602-4700

SCALE: 1/1
DATE: 05-OCT-15
DRW BY: RDL
CHK BY:10/13/2025-SEM
APPR BY:

DRIVE ASSEMBLY,7" LHH

MAT'L

23100DR-007LH

SHEET 2 OF 2

| ITEM | QTY | PART NO. | DESCRIPTION | PARENT ITEM |
|---|---|---|---|---|
| 1 | 1 | 191592-000 | BELT, TIMING, 1/2P | 23120D-007LH |
| 2 | 1 | 363157-000 | COUPLING | 23120D-007LH |
| 3 | 1 | 412108-000 | MOTOR,STEPPER 2 STACK,HITORQ | 23120D-007LH |
| 4 | 4 | A20568-005 | DRIVE MOTOR RISER | 23120D-007LH |
| 5 | 1 | A21421-000 | DRIVE PULLEY (MODIFIED) | 23120D-007LH |
| 6 | 1 | C20097-011 | PULL ROLL DRIVE SHAFT | 23120D-007LH |

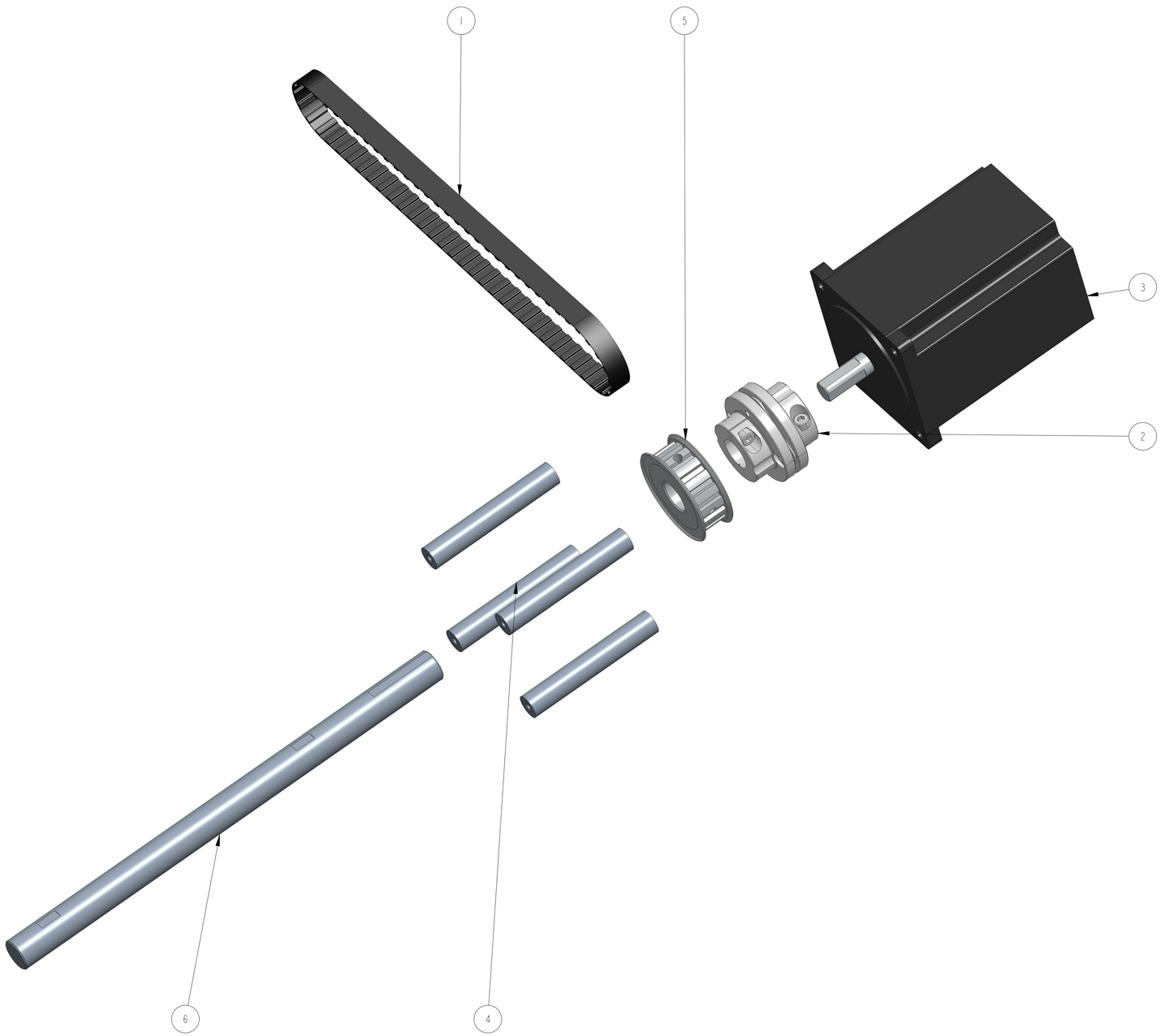


| REV | DATE | DESCRIPTION | BY |
|---|---|---|---|
| A | Oct-16-25 | NEW DRAWING | RDL |

THIS IS A PRO-ENGINEER DOCUMENT AND MAY NOT BE MODIFIED MANUALLY

UNLESS OTHERWISE SPECIFIED
DIMENSIONAL TOLERANCE
.X ± .1
.XX ± .01
.XXX ± .005
ANGLES ± 30'

SURFACE FINISH 125
BREAK ALL EDGES .005/.015
CORNER RADIUS .010/.030

QUADREL LABELING SYSTEMS
7670 JENTHER DRIVE
MENTOR, OHIO 44060
(440) 602-4700

| | |
|---|---|
| SCALE: | 3/4 |
| DATE: | Oct-16-25 |
| DRW BY: | RDL |
| CHK BY: | SEM |
| APPR BY: | |

STEPPER DRIVE ASSEMBLY

MAT'L

23120D-007LH

SHEET 1 OF 2

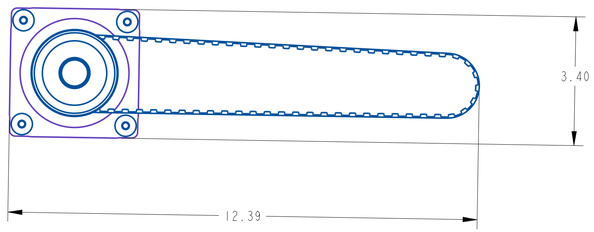


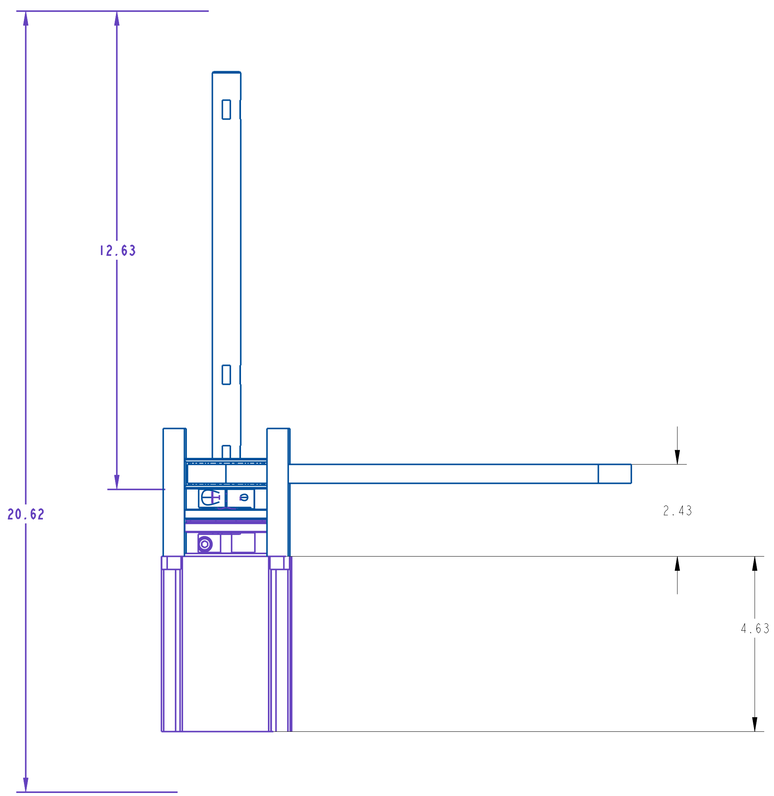


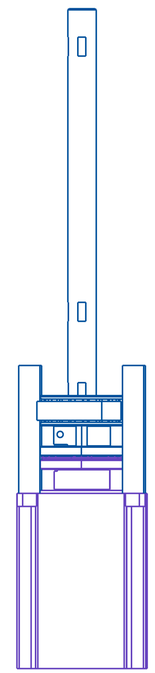

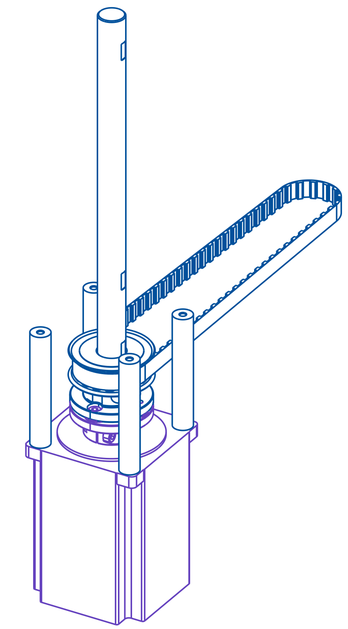

| REV | DATE | DESCRIPTION | BY |
|---|---|---|---|
| A | Oct-06-25 | NEW DRAWING | RDL |

THIS IS A PRO-ENGINEER DOCUMENT AND MAY NOT BE MODIFIED MANUALLY

UNLESS OTHERWISE SPECIFIED
DIMENSIONAL TOLERANCE
.X ± .1
.XX ± .01
.XXX ± .005
ANGLES ± 30'

SURFACE FINISH 125
BREAK ALL EDGES .005/.015
CORNER RADIUS .010/.030
ALL ANGLES ARE 90°

QUADREL LABELING SYSTEMS
7670 JENTHER DRIVE
MENTOR, OHIO 44060
(440) 602-4700

SCALE: 1/2
DATE: Oct-06-25
DRW BY: RDL
CHK BY:
APPR BY:

STEPPER DRIVE ASSEMBLY

MAT'L

23120D-007LH

SHEET 2 OF 2

| ITEM | QTY | PART NO. | DESCRIPTION | PARENT ITEM |
|---|---|---|---|---|
| 1 | 1 | 202047-000 | FAN, 24VDC, 93 CFM, 145MA | 22625FC-000 |
| 2 | 1 | 261999-000 | FITTING, 1/2" STRAIGHT | 22625FC-000 |
| 3 | 1 | 411706-000 | FAN COVER | 22625FC-000 |
| 4 | 2 | B21862-125 | FAN SUPPORT | 22625FC-000 |
| 5 | 1 | C20895-000 | REWIND BELT COVER | 22625FC-000 |
| 6 | 1 | C20896-125 | MOTOR COVER SIDE PLATE | 22625FC-000 |
| 7 | 1 | C20897-125 | Q120 STEPPING MOTOR COVER | 22625FC-000 |

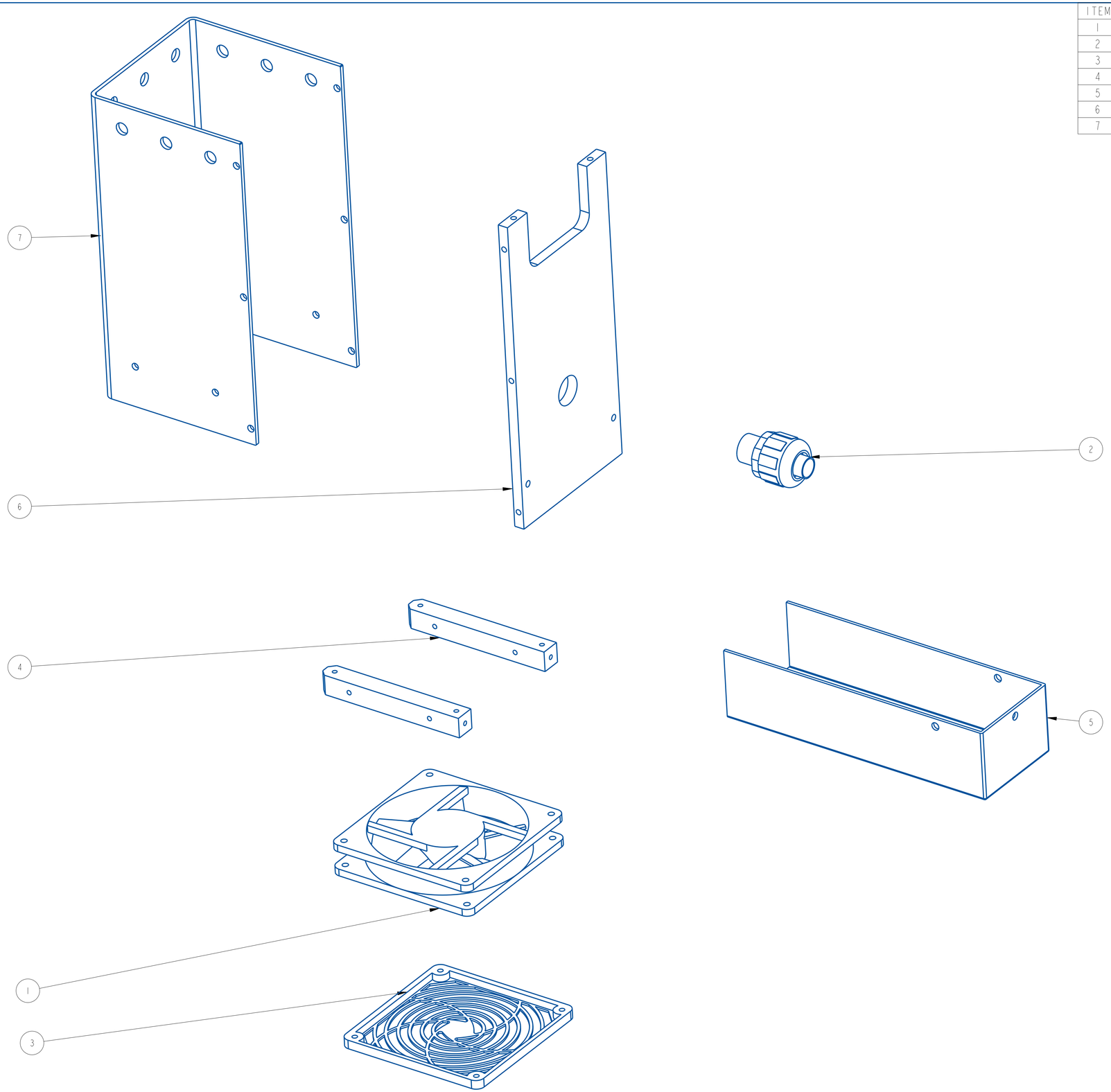


| REV | DATE | DESCRIPTION | BY |
|---|---|---|---|
| A | 06/12/2024 | NEW DRAWING | SEM |

THIS IS A PRO-ENGINEER DOCUMENT AND MAY NOT BE MODIFIED MANUALLY

UNLESS OTHERWISE SPECIFIED
DIMENSIONAL TOLERANCE
.X ± .1
.XX ± .01
.XXX ± .005
ANGLES ± 30°

SURFACE FINISH 125
BREAK ALL EDGES .005/.015
CORNER RADIUS .0107.030

QUADREL LABELING SYSTEMS
7670 JENTHER DRIVE
MENTOR, OHIO 44060
(440) 602-4700

SCALE: 1/16
DATE: 06/12/2024
DRW BY: SEM
CHK BY: 06/12/2024-SEM
APPR BY:

Q120 FAN AND COVER ASSEMBLY

MAT'L

22625FC-000

SHEET 1 OF 2

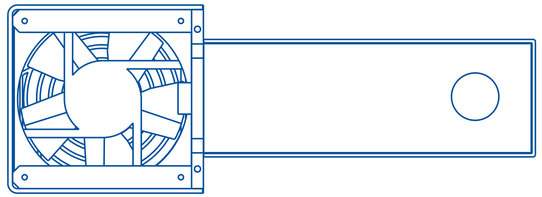

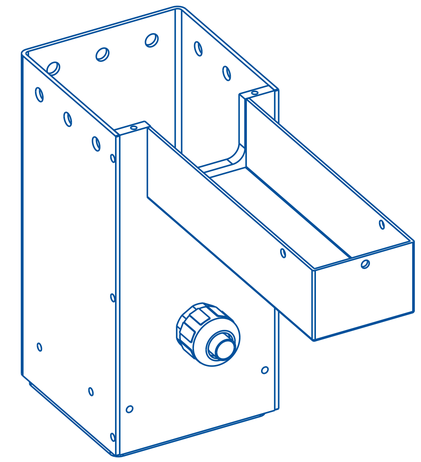

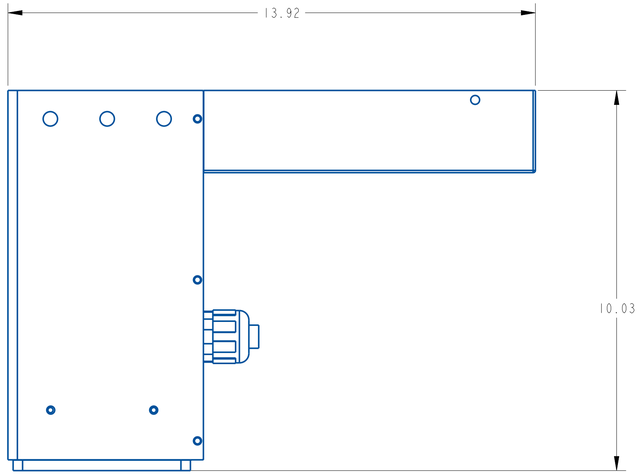


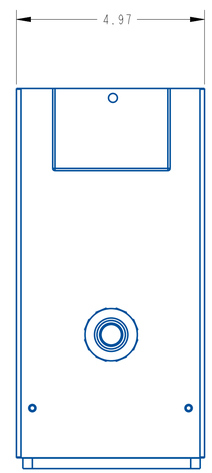


| REV | DATE | DESCRIPTION | BY |
|---|---|---|---|
| A | 06/12/24-SEM | NEW DRAWING | SEM |

THIS IS A PRO-ENGINEER DOCUMENT AND MAY NOT BE MODIFIED MANUALLY

UNLESS OTHERWISE SPECIFIED
DIMENSIONAL TOLERANCE
X ± .1
XX ± .01
XXX ± .005
ANGLES ± 30'

SURFACE FINISH 125
BREAK ALL EDGES .005/.015
CORNER RADIUS .010/.030
ALL ANGLES ARE 90°

QUADREL LABELING SYSTEMS
7670 JENTHER DRIVE
MENTOR, OHIO 44060
(440) 602-4700

SCALE: 1/2
DATE: 06/12/2024-SEM
DRW BY: SEM
CHK BY: 06/12/2024-SEM
APPR BY:

Q120 FAN AND COVER ASSEMBLY

MAT'L

22625FC-000

SHEET 2 OF 2

# STRAC8

## AC Input Step Motor Drive

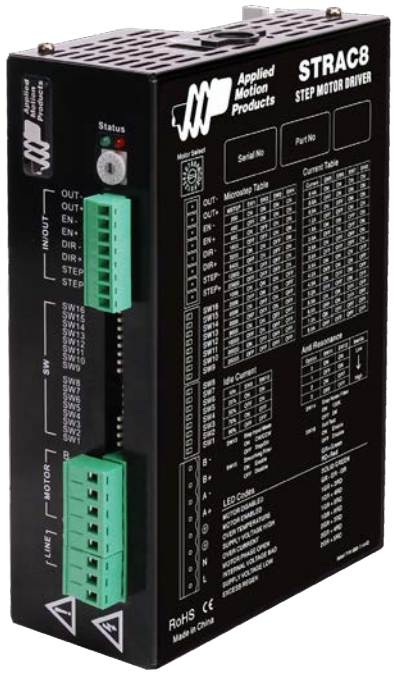


Hardware Manual

Applied Motion Products, Inc.

920-0128 Rev B
02/06/18

# Contents

1 Introduction ..... 3
1.1 Features ..... 3
1.2 Block diagram ..... 4
2 Mounting the Drive ..... 4
3 Connections ..... 5
3.1 Connecting to Power ..... 6
3.2 Connecting to a Motor ..... 7
3.3 Connecting the Inputs and Outputs ..... 9
3.3.1 Step & Direction Inputs ..... 9
3.3.2 EN input ..... 10
3.3.3 Fault Output ..... 11
4 Switch Selection ..... 12
4.1 Microstep Resolution ..... 12
4.2 Running Current ..... 13
4.3 Idle Current ..... 13
4.4 Anti Resonance ..... 14
4.5 Step Input Mode ..... 14
4.6 Step Input Signal Filter ..... 14
4.7 Step Smoothing Filter ..... 14
4.8 Self Test ..... 14
5 Motor selection ..... 15
5.1 Recommended motors ..... 16
5.2 Torque-Speed Curves ..... 16
6 Error Codes ..... 18
7 Reference Materials ..... 19
7.1 Mechanical Outline· ..... 19
7.2 Specifications ..... 20
7.2.1 Electrical Specifications ..... 20
7.2.2 Environmental Specifications ..... 20
8 Contacting Applied Motion Products ..... 21

# 1 Introduction

Thank you for selecting the Applied Motion Products' STRAC8 Step Motor Drive. The STRAC8 series AC input drives are based on advanced digital current control technology and provide high torque, low noise and low vibration. Many of the operational paramteres are switch selectable. We hope our dedication to performance, quality and economy will make your motion control project successful.

## 1.1 Features

- Advanced digital current control provides excellent high speed torque
- Auto Setup measures motor parameters and configures motor current control and anti-resonance gain settings
- Uses universal AC input 90 to 240 VAC
- Speed Range - up to 50 rps
- Microstep Resolution - switch selectable, 16 settings: 200, 400, 800, 1600, 3200, 6400, 12800, 25600, 1000, 2000, 4000, 5000, 8000, 10000, 20000, 25000 steps/rev
- Running Current - peak setting, switch selectable, 16 settings: 0.4, 0.6, 0.9, 1.2, 1.5, 2.0, 2.5, 3.0, 3.5, 4.0, 4.5, 5.2, 5.9, 6.6, 7.3, 8.0A
- Idle Current - automatic reduction of running current 1 second after the motor stops, switch selectable, 4 settings: 25%, 50%, 70%, 90% of running current
- Anti Resonance - raises the system-damping ratio to eliminate midrange instability and allow stable operation throughout the speed range of the motor, switch selectable, 4 settings for low to high inertia loads
- Control Modes - Step/Direction pulse input or CW/CCW pulse input, switch selectable
- Input Signal Filter - filters out unwanted noise that can cause extra steps, switch selectable, 2MHz or 150KHz
- Step Smoothing Filter (Microstep Emulation) - performs high resolution stepping by synthesizing coarse steps into fine micro-steps, switch selectable, ON or OFF
- Self Test - performs a 2 rev, 0.5RPS, CW/CCW move test, switch selectable, ON or OFF
- Motor Selection - a 16 bit rotary switch is used to select the desired motor database which is pre-loaded at the Factory

## 1.2 Block diagram

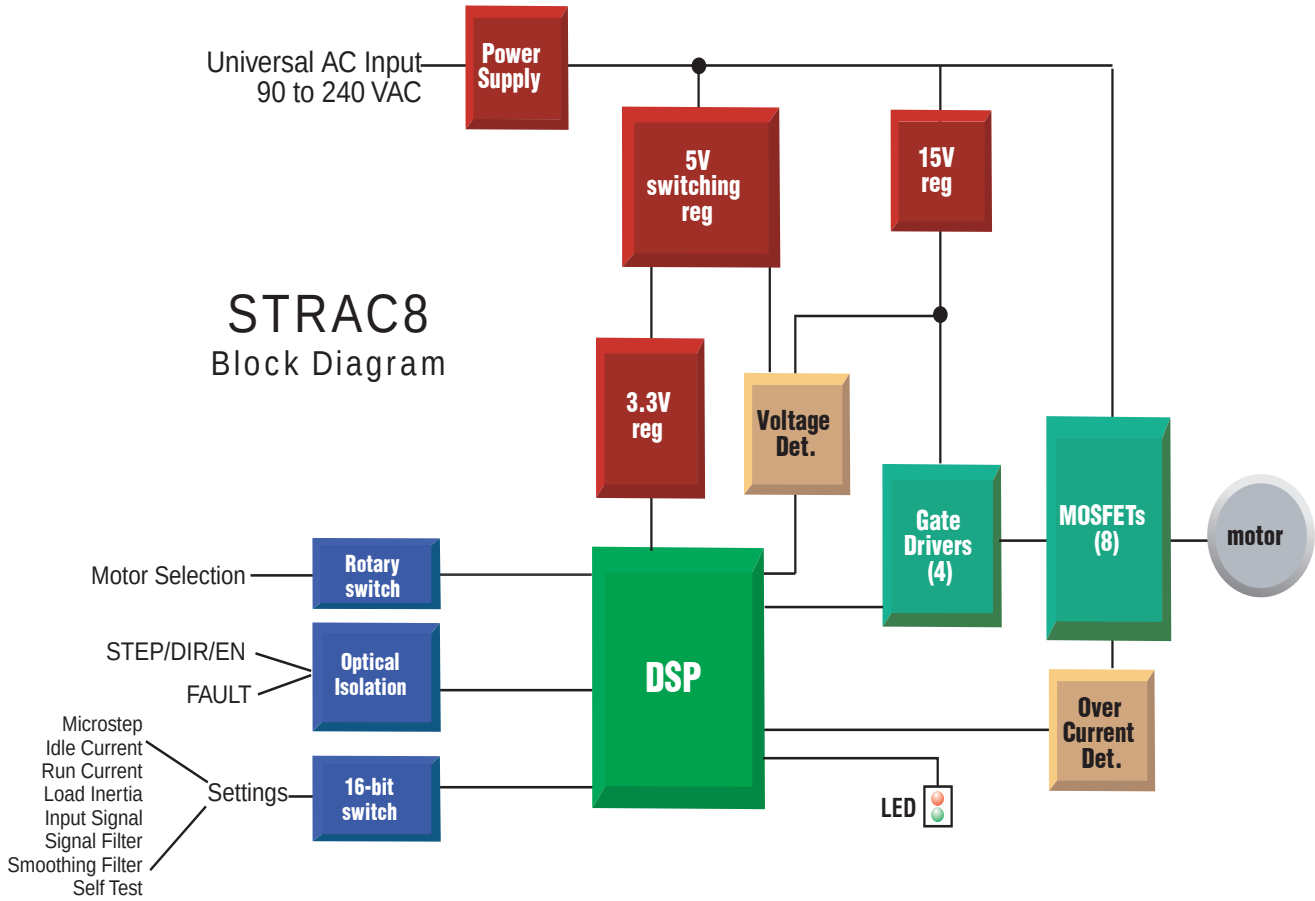


# 2 Mounting the Drive

The STRAC8 drive can be mounted only on the narrow side of the chassis. M4 screws should be used in the two holes at the back of the drive.

The amplifiers in the drive generate heat. To operate the drive continuously at maximum power forced air cooling, as from a fan, should be provided.

Never use the drive in a space where there is no air flow or where other devices can cause the surrounding air to be more than 40 °C. Never put the drive where it can get wet or where metal particles can fall into it.

# 3 Connections

To use the STRAC8 Step Drive, the following items are needed:

- Universal AC input of 90 to 240 VAC
- Pulse & Direction signal
- A compatible step motor

## STRAC8 Wiring Diagram

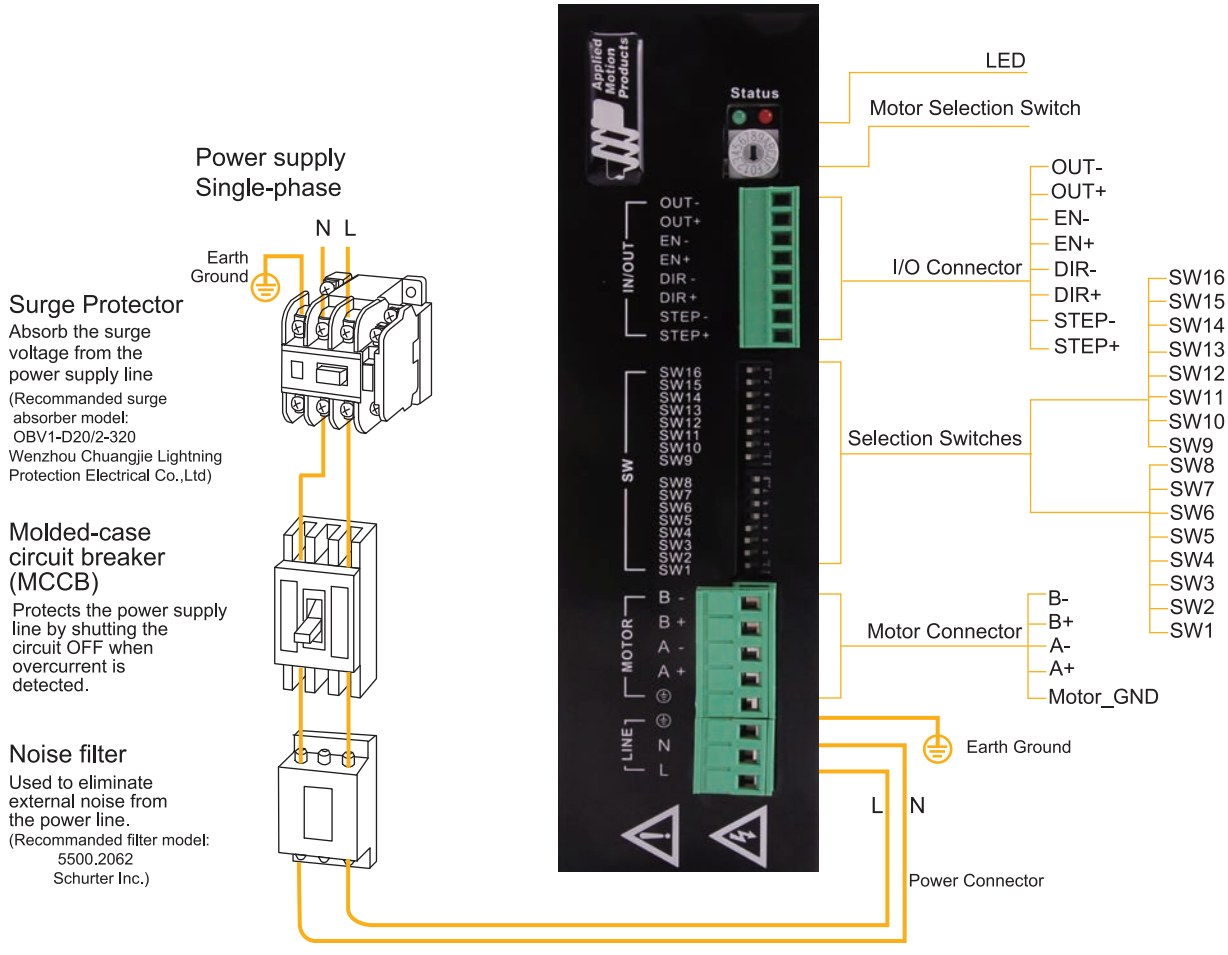

## 3.1 Connecting to Power

Use the supplied connector to connect to the AC supply according to the diagram below. Use 16 AWG wire for Line (L) and Neutral (N). Use 14 AWG for Earth Ground (G).

**Care should always be taken when working with high voltages.**

In regions where the single-phase supply is higher, an auto transformer can be used to drop the voltage to the correct level.

The STRAC8 contains an internal 10A fast acting fuse.

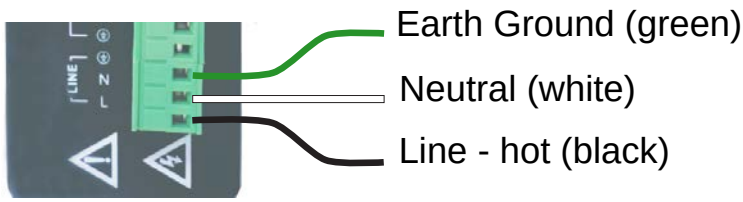


### Regeneration Clamping Circuit

High speed motion generates high voltage which can be transferred to the drive during rapid deceleration, and the drive may indicate an over-voltage error condition after stopping from a high speed motion. The STRAC8 has regeneration clamping circuitry with an internal 200ohm 10W resistor. To protect the drive in a high speed, high load inertia application Applied Motion Products' recommends connecting an external 80ohm 80W resistor to the regen connector located on the side of the STRAC8 drive.

### External Resistor Connector

Housing: 39-01-3028(MOLEX)

Crimp: 39-00-0038(MOLEX)

## 3.2 Connecting to a Motor

Motor connections should be made according to the following diagrams.

Never connect or disconnect the motor while the power is on.

Note: it is highly recommended that you use a motor with a shielded cable with the STRAC8. Always connect the cable drain wire to the drive's ⏚ terminal (next to the A+ terminal)

The recommended Applied Motion motors for the STRAC8 include shielded cables. See the Recommended Motors section for a list of part numbers. The recommended motors should be connected to 120V drives in parallel, and to 220V drives in series, according to the diagram below.

Be sure to connect the cable shield for safety and to minimize electrical interference.

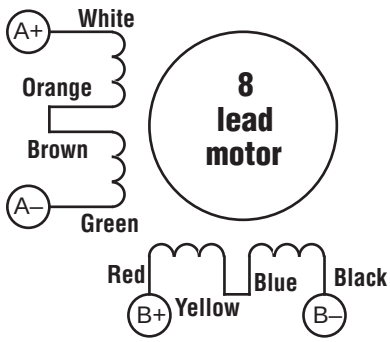


**8 Leads Series Connected**

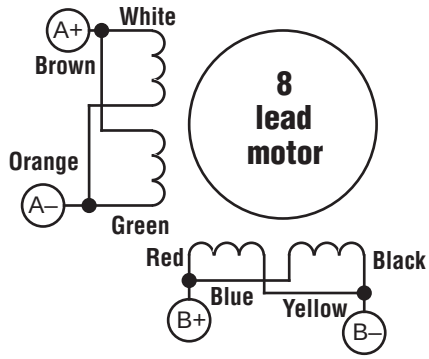


**8 Leads Parallel Connected**

### Connecting Other Motors

Four lead motors can only be connected one way. Please follow the sketch at the right.

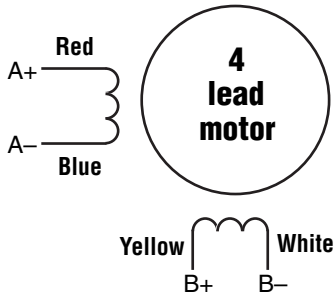


**4 Leads**

Six lead motors can be connected in series or center tap. In series mode, motors produce more torque at low speeds, but cannot run as fast as in the center tap configuration. In series operation, the motor should be operated at 30% less than the rated current to prevent overheating. Winding diagrams for both connection methods are shown below. NC means not connected.

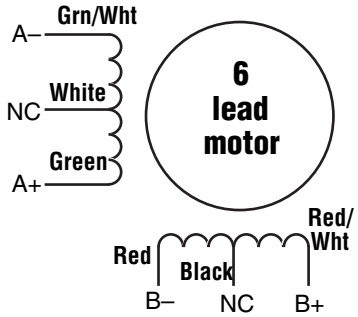


**6 Leads Series Connected**

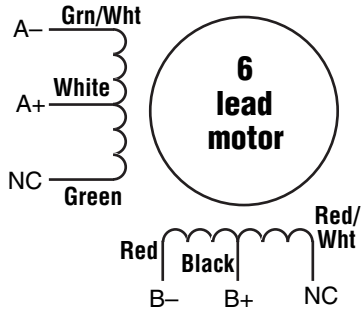


**6 Leads Center Tap Connected**

Eight lead motors can also be connected in two ways: series and parallel. As with six lead motors, series operation gives you less torque at high speeds, but may result in lower motor losses and less heating. In series operation, the motor should be operated at 30% less than the unipolar rated current. The wiring diagrams for eight lead motors without shielded cables are shown below.

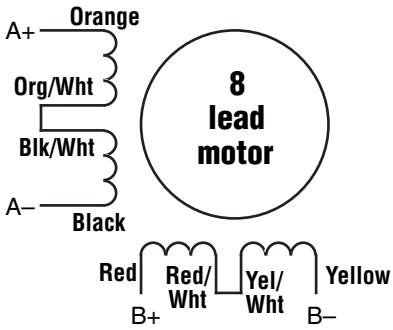


**8 Leads Series Connected**

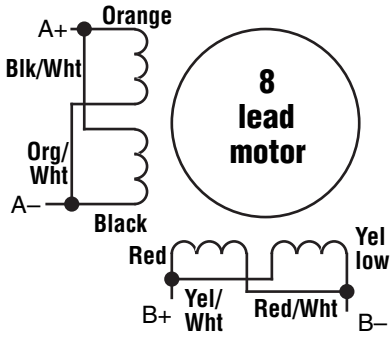


**8 Leads Parallel Connected**

## 3.3 Connecting the Inputs and Outputs

### 3.3.1 Step & Direction Inputs

The STRAC8 Step Drive has two high speed optically isolated inputs called STEP and DIR. They accept 5 to 24 volt single-ended or differential signals, up to 2MHz. The maximum voltage that can be applied to the input is 28V.

The motor executes one step when the STEP input closes.

The direction of rotation is controlled by the DIR input state. A closed input (logic “0”) will result in clockwise rotation, and an open input (logic “1”) will result in counterclockwise rotation.

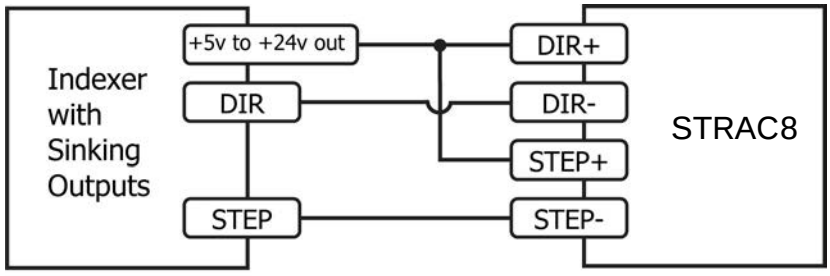


Connecting to Indexer with Sinking Outputs

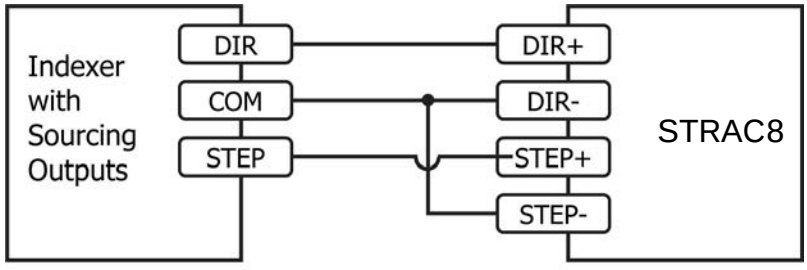


Connecting to Indexer with Sourcing Outputs

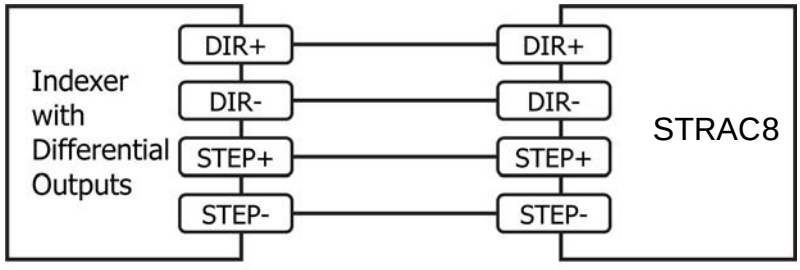


Connecting to Indexer with Differential Outputs
Many high-speed indexers have differential outputs

### 3.3.2 EN input

The EN input enables or disables the drive amplifier. It is an optically isolated input that accepts a 5 to 24 volt single-ended or differential signal. The maximum voltage that can be applied to the input is 28V.

When EN input is closed, the driver amplifier is deactivated, all the MOSFETs will shut down, and the motor will be free. When EN input is open, the drive is activated.

When the drive has encountered an error and the fault is removed from the system, a falling signal into the EN input will reset the error status and activate the drive amplifier again.

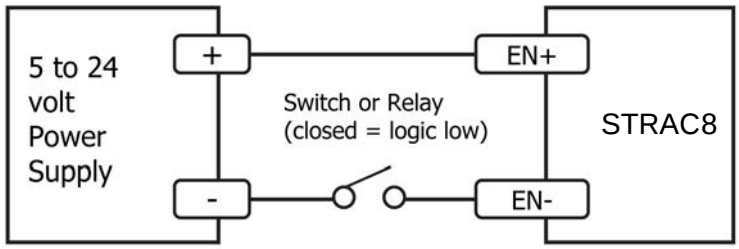


Connecting the Input to a Switch or Relay

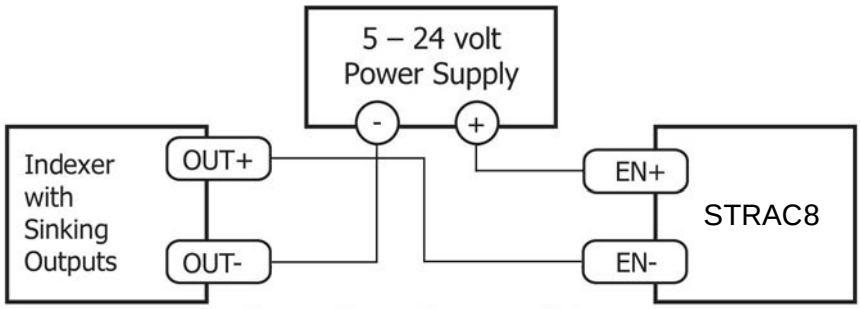


Connecting the Input to Sinking Outputs

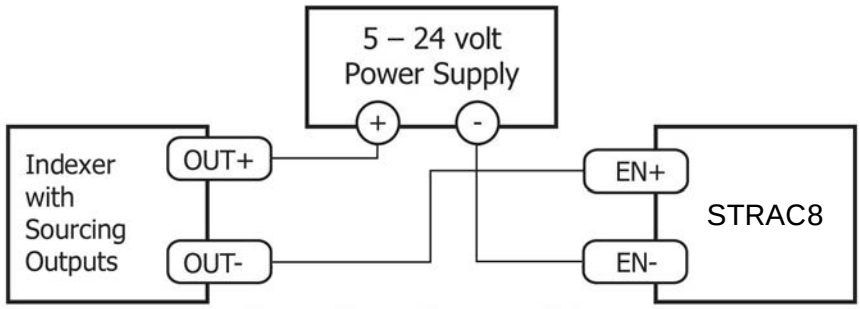


Connecting the Input to Sourcing Outputs

### 3.3.3 Fault Output

The FAULT Output is optically isolated. The maximum collector current is 100mA, and the maximum collector to emitter voltage is 30 volts. The output can be wired to sink or source current.

When drive is working normally, the output is open. When the drive encounters an error, the output closes.

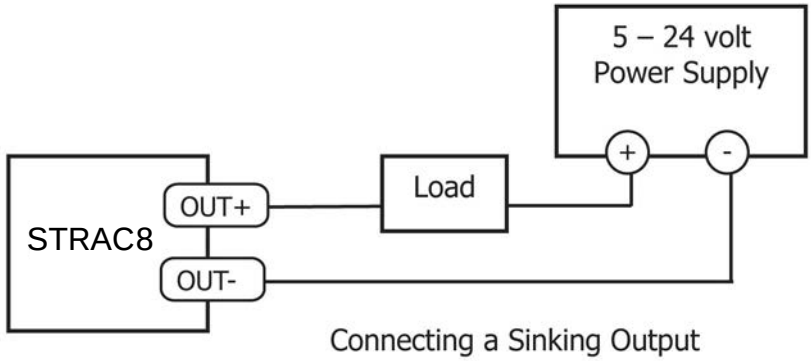


Connecting a Sinking Output

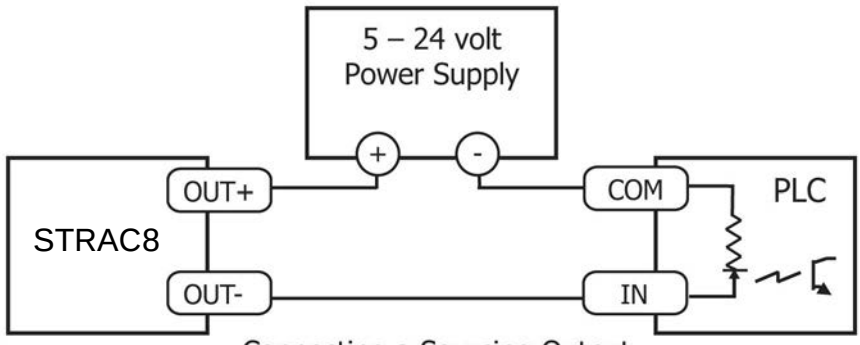


Connecting a Sourcing Output

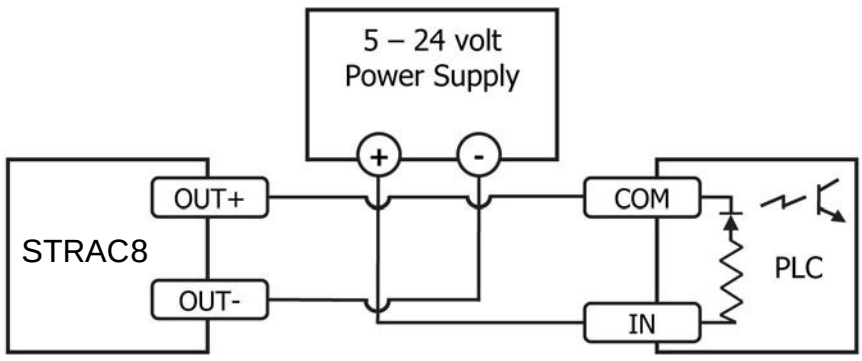


Connecting a Sourcing Output again

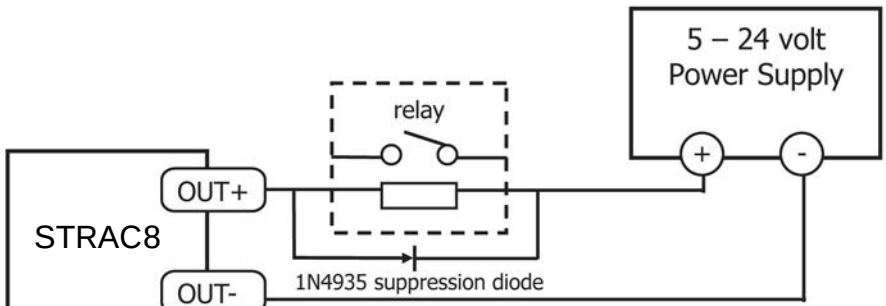


Driving a Relay

# 4 Switch Selection

Many of the operational parameters of the STRAC8 can be set or changed by position switches - either by a single switch or a combination of ON/OFF settings of 2 or more switches.

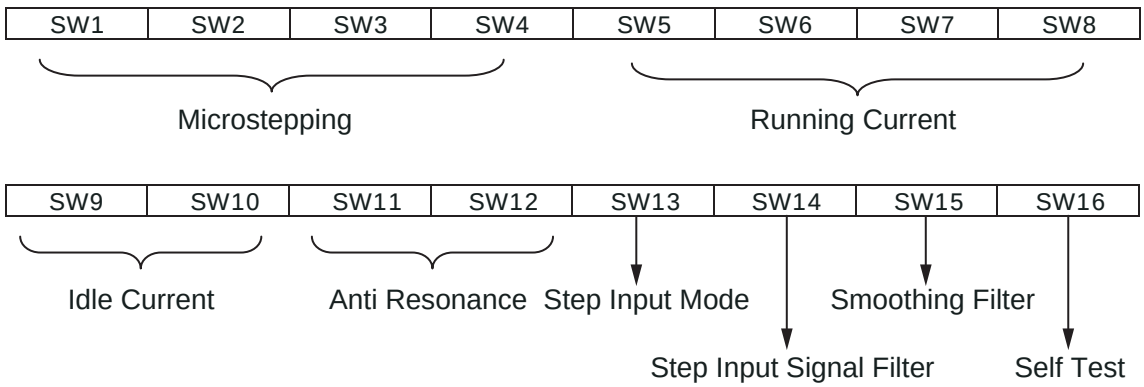


## 4.1 Microstep Resolution

The microstep resolution is set by the SW1, SW2, SW3 and SW4 switches. There are 16 settings.

| Microstep(steps/rev) | SW1 | SW2 | SW3 | SW4 |
|---|---|---|---|---|
| 200 | ON | ON | ON | ON |
| 400 | OFF | ON | ON | ON |
| 800 | ON | OFF | ON | ON |
| 1600 | OFF | OFF | ON | ON |
| 3200 | ON | ON | OFF | ON |
| 6400 | OFF | ON | OFF | ON |
| 12800 | ON | OFF | OFF | ON |
| 25600 | OFF | OFF | OFF | ON |
| 1000 | ON | ON | ON | OFF |
| 2000 | OFF | ON | ON | OFF |
| 4000 | ON | OFF | ON | OFF |
| 5000 | OFF | OFF | ON | OFF |
| 8000 | ON | ON | OFF | OFF |
| 10000 | OFF | ON | OFF | OFF |
| 20000 | ON | OFF | OFF | OFF |
| 25000 | OFF | OFF | OFF | OFF |

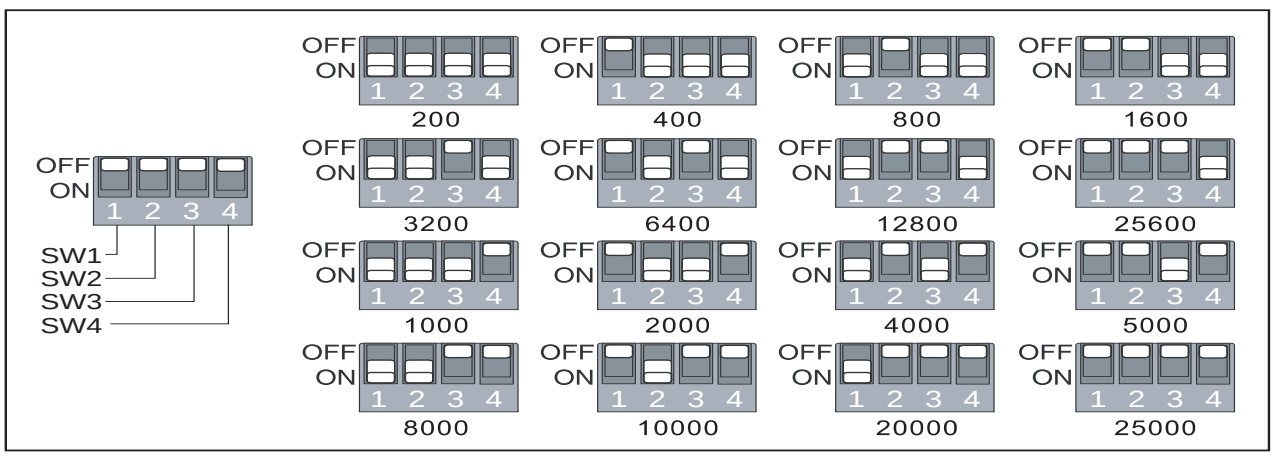

## 4.2 Running Current

The output current is set by the SW5, SW6, SW7and SW8 switches. There are 16 settings.

**NOTE: Drive's running current will be limited by the lower value between motor selection rotary switch and the dip current switch**

| Current (Peak) | SW5 | SW6 | SW7 | SW8 |
|---|---|---|---|---|
| 0.4A | ON | ON | ON | ON |
| 0.6A | OFF | ON | ON | ON |
| 0.9A | ON | OFF | ON | ON |
| 1.2A | OFF | OFF | ON | ON |
| 1.5A | ON | ON | OFF | ON |
| 2.0A | OFF | ON | OFF | ON |
| 2.5A | ON | OFF | OFF | ON |
| 3.0A | OFF | OFF | OFF | ON |
| 3.5A | ON | ON | ON | OFF |
| 4.0A | OFF | ON | ON | OFF |
| 4.5A | ON | OFF | ON | OFF |
| 5.2A | OFF | OFF | ON | OFF |
| 5.9A | ON | ON | OFF | OFF |
| 6.6A | OFF | ON | OFF | OFF |
| 7.3A | ON | OFF | OFF | OFF |
| 8.0A | OFF | OFF | OFF | OFF |

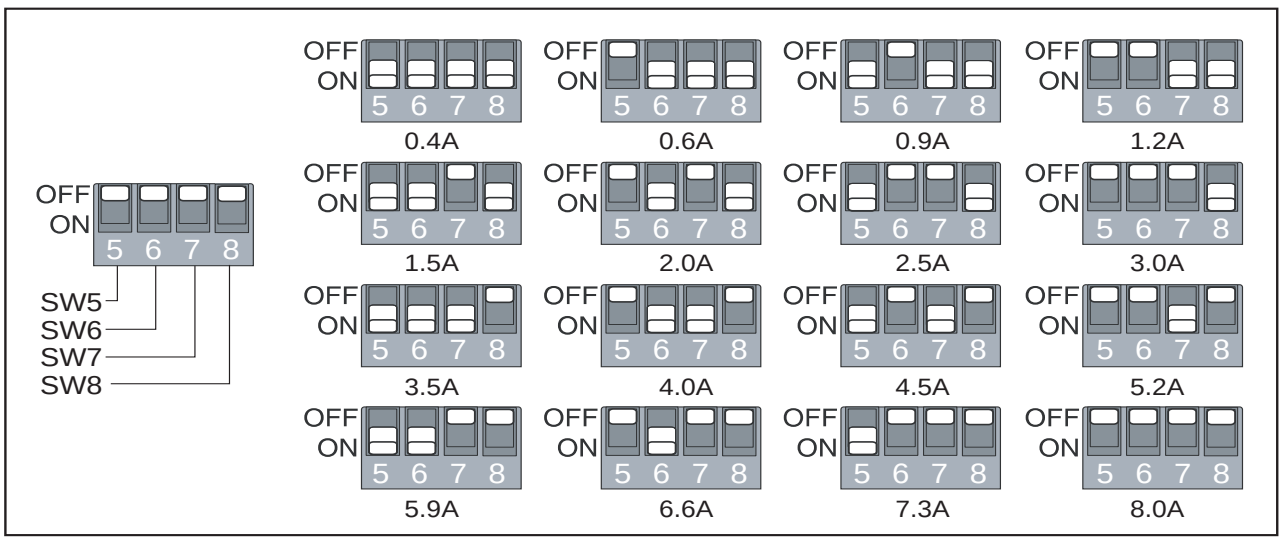


## 4.3 Idle Current

The running current of the STRAC8 drive is automatically reduced whenever the motor isn't moving. The SW9 and SW10 switches control the percentage of the running current the idle current is reduced to. The 90% setting is useful when a high holding torque is required. To minimize motor and drive heating it is highly recommended that the idle current reduction feature be set as low as the

| Idle | SW9 | SW10 |
|---|---|---|
| 25% | ON | ON |
| 50% | OFF | ON |
| 70% | ON | OFF |
| 90% | OFF | OFF |

application can tolerate.

## 4.4 Anti Resonance

The SW11 and SW12 switches select the load inertia. There are 4 settings. The inertia selection can help the STRAC8 drive to calculate the current control parameter. If the load inertia is close to that of the motor rotor, the low setting should be selected. If the load inertia is higher than that of the rotor, a proportionally higher setting should be selected.

| Option | SW11 | SW12 | Inertia |
|---|---|---|---|
| 0 | ON | ON | Low ↓ High |
| 1 | OFF | ON | |
| 2 | ON | OFF | |
| 3 | OFF | OFF | |

## 4.5 Step Input Mode

Most indexers and motion controllers provide motion commands in the Step and Direction format. The Step signal pulses once for each motor step and the Direction signal commands direction. Some PLCs use a CW/CCW command signal: one signal pulses once for each desired step in the clockwise direction (CW Step), while a second signal pulses for counterclockwise motion (CCW Step). In the CW/CCW control mode, the CW signal should be connected to the STEP input and the CCW signal to the DIR input.

**Setting SW13 to OFF enables the Step & Direction format, the ON position enables the CW/CCW format.**

**Note: The power must be cycled each time the position of SW13 is changed.**

## 4.6 Step Input Signal Filter

The STEP and DIR signal inputs have a built-in digital filter to reduce the external noise. If the system works on the low microstep, the 150 KHz setting should be selected. If the system works on the high microstep, the 2 MHz setting should be used.

The SW14 switch selects the digital signal filter. ON sets it to 150 KHz, OFF sets it to 2 MHz.

**Note: The power must be cycled each time the position of SW14 is changed.**

## 4.7 Step Smoothing Filter

Command signal smoothing can soften the effect of immediate changes in velocity and direction, making the motion of the motor less jerky. An added advantage is that it can reduce the wear on mechanical components. SW15 selects this function - ON enables it, OFF disables it.

This function can cause a small delay in following the control signal, and it should be used with that in mind.

**Note: The power must be cycled each time the position of SW15 is changed.**

## 4.8 Self Test

Setting SW16 to ON after the drive is powered up, will cause the drive to perform a Self Test move of 2 revolutions both CW and CCW at .5 rps. Setting SW16 to OFF will disable this feature.

# 5 Motor selection

Each position of the 16-bit rotary switch selects a different motor, and automatically sets the configuration parameters in the drive. The STRAC8 drive comes programmed with up to 16 typical motors as factory defaults. Drives can be customized with specially selected motors when required.

**NOTE: Drive's running current will be limited by the lower value between motor selection rotary switch and the dip current switch**

**NOTE: When the motor selection is changed, the drive power supply will need to be cycled.**

| SW position | MOTOR | WIRING | Input Voltage | Input Voltage |
|---|---|---|---|---|
| 0 | Reserved | Reserved | 0 A | |
| 1 | Reserved | Reserved | 0 A | |
| 2 | HT23-552 | Parallel | 1.5 A | 120VAC |
| 3 | HT23-553 | Parallel | 1.5 A | 120VAC |
| 4 | HT23-554 | Parallel | 1.8 A | 120VAC |
| 5 | HT34-495/695 | Parallel | 5.1 A | 120VAC |
| 6 | HT34-496/696 | Parallel | 5.1 A | 120VAC |
| 7 | HT34-497/697 | Parallel | 5.8 A | 120VAC |
| 8 | HT23-552 | Series | 0.75 A | 240VAC |
| 9 | HT23-553 | Series | 0.75 A | 240VAC |
| A | HT23-554 | Series | 0.9 A | 240VAC |
| B | HT34-495/695 | Series | 2.5 A | 240VAC |
| C | HT34-496/696 | Series | 2.5 A | 240VAC |
| D | HT34-497/697 | Series | 2.5 A | 240VAC |
| E | Custom Motor | Reserved | 8 A | 120VAC/240VAC |
| F | Custom Motor | Reserved | 8 A | 120VAC/240VAC |

## 5.1 Recommended motors

### Recommended Motors - NEMA 23

| Motor Part No. | STRAC8 (120) | | STRAC8 (220) | | Holding Torque oz-in | Rotor Inertia oz-in-sec^2 | Motor Length inch (mm) |
|---|---|---|---|---|---|---|---|
| | Connection | Drive Current Setting amps/phase | Connection | Drive Current Setting amps/phase | | | |
| HT23-552 | parallel | 1.50 | series | 0.75 | 84.4 | 1.70E-03 | 1.71 (43.5) |
| HT23-553 | parallel | 1.50 | series | 0.75 | 167 | 4.25E-03 | 2.17 (55) |
| HT23-554 | parallel | 1.80 | series | 0.90 | 255 | 6.80E-03 | 3.05 (77.5) |

### Recommended Motors - NEMA 34

| Motor Part No. | STRAC8 (120) | | STRAC8 (220) | | Holding Torque oz-in | Rotor Inertia oz-in-sec^2 | Motor Length inch (mm) |
|---|---|---|---|---|---|---|---|
| | Connection | Drive Current Setting amps/phase | Connection | Drive Current Setting amps/phase | | | |
| HT34-495/695 | parallel | 5.10 | series | 2.55 | 555 | 2.27E-02 | 3.11 (79) |
| HT34-496/696 | parallel | 5.10 | series | 2.55 | 1110 | 4.53E-02 | 4.63 (117.5) |
| HT34-497/697 | parallel | 5.80 | series | 3.20 | 1694 | 6.80E-02 | 6.14 (156) |

*Note: The "Drive Current Setting" shown here differs from the rated current of each motor because the rated current is RMS and the drive current setting is peak sine. If you are using a motor not listed here, for best results set the drive current at the motor's rated current x 1.2.*

## 5.2 Torque-Speed Curves

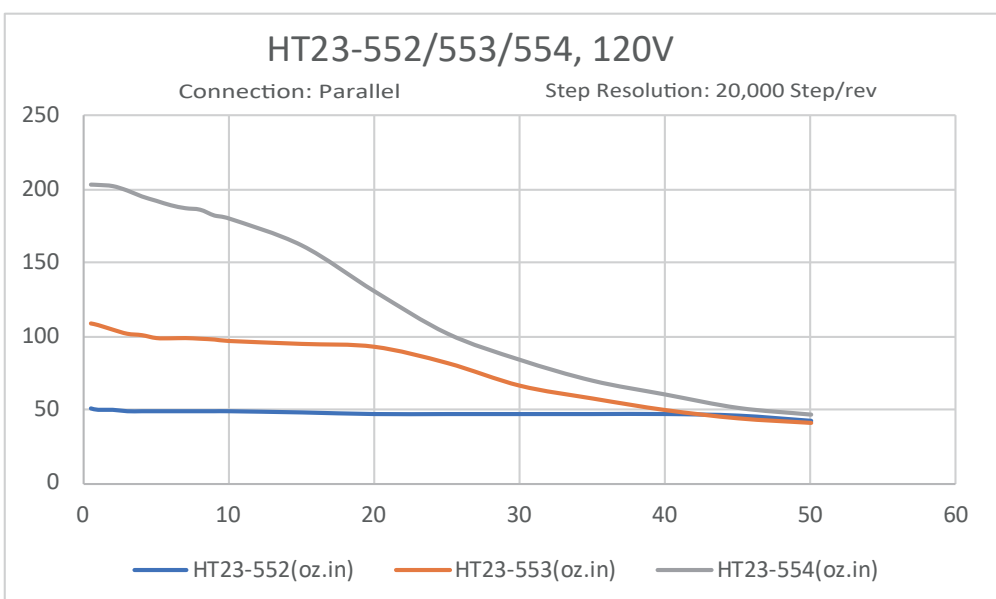

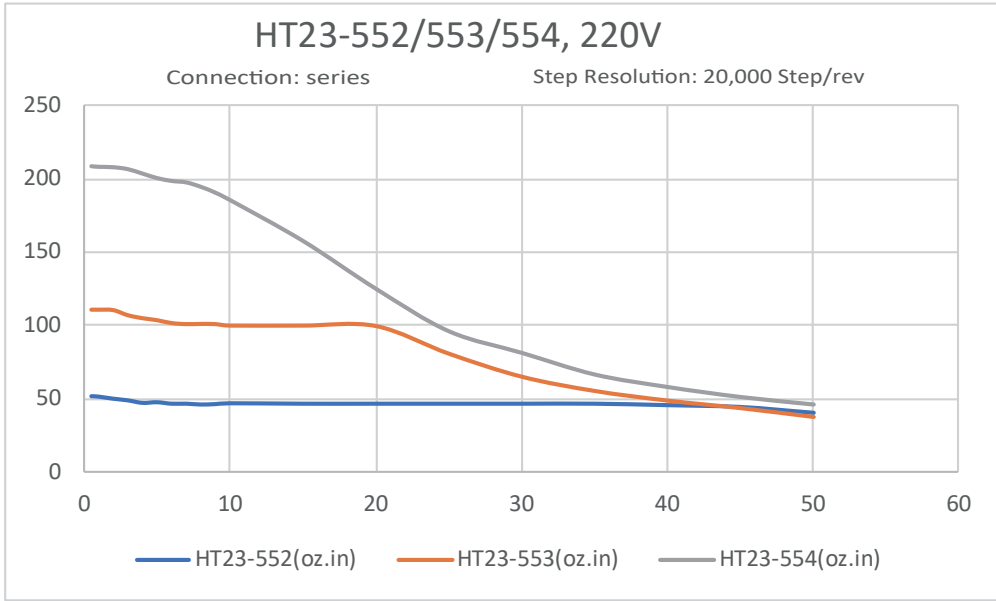
HT23-552/553/554, 220V
Connection: series
Step Resolution: 20,000 Step/rev
250
200
150
100
50
0
0
10
20
30
40
50
60
HT23-552(oz.in)
HT23-553(oz.in)
HT23-554(oz.in)

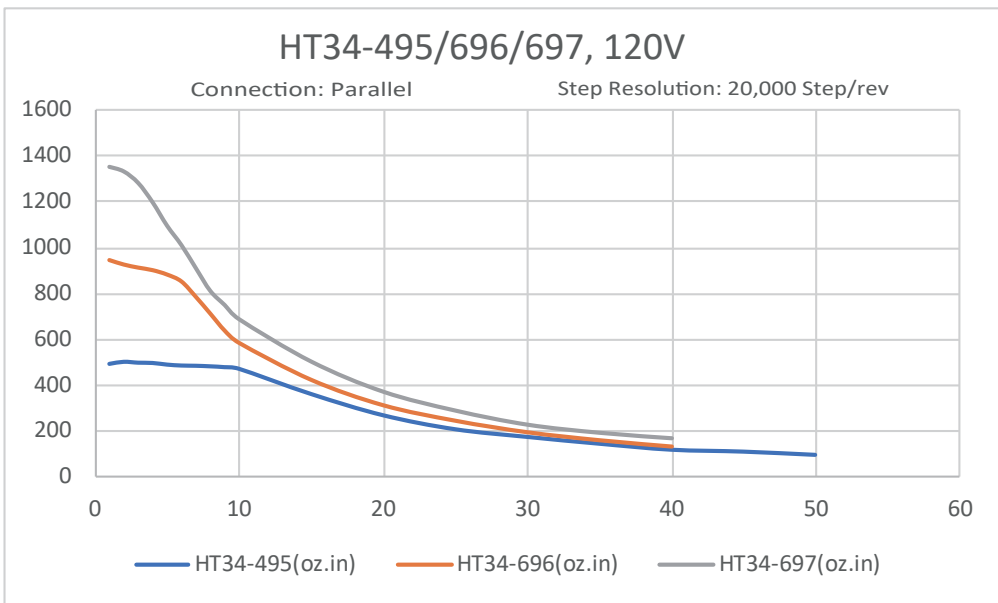
HT34-495/696/697, 120V
Connection: Parallel
Step Resolution: 20,000 Step/rev
1600
1400
1200
1000
800
600
400
200
0
0
10
20
30
40
50
60
HT34-495(oz.in)
HT34-696(oz.in)
HT34-697(oz.in)

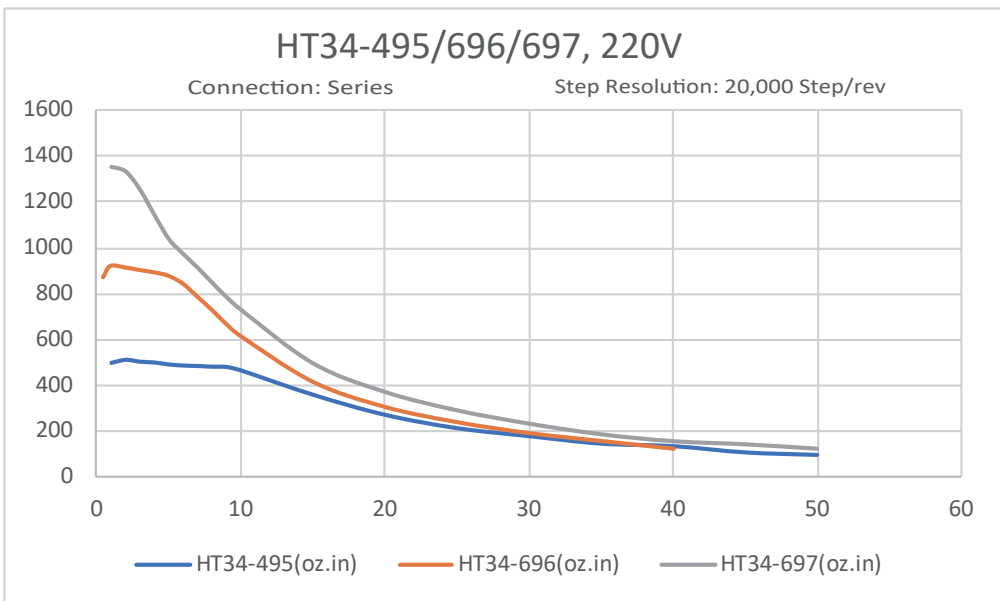
HT34-495/696/697, 220V
Connection: Series
Step Resolution: 20,000 Step/rev
1600
1400
1200
1000
800
600
400
200
0
0
10
20
30
40
50
60
HT34-495(oz.in)
HT34-696(oz.in)
HT34-697(oz.in)

## 6 Error Codes

The STRAC8 Drive has two LEDs to indicate status. When the motor is enabled the green LED flashes slowly, when the green LED is solid the motor is disabled. If the red LED flashes, an error has occurred. Errors are indicated by combinations of red and green flashes as shown below:

| Code | | Error |
|---|---|---|
| 🟢 | Solid green | Motor Disabled |
| 🟢🟢 | Flashing green | Motor Enabled |
| 🔴🔴🔴🟢 | 3 red, 1 green | Over Temperature |
| 🔴🔴🔴🟢🟢 | 3 red, 2 green | Bad Internal Voltage |
| 🔴🔴🔴🔴🟢 | 4 red, 1 green | Supply Voltage High |
| 🔴🔴🔴🔴🟢🟢 | 4 red, 2 green | Supply Voltage Low |
| 🔴🔴🔴🔴🔴🟢 | 5 red, 1 green | Over Current |
| 🔴🔴🔴🔴🔴🟢🟢 | 5 red, 2 green | Excess Regen |
| 🔴🔴🔴🔴🔴🔴🟢 | 6 red, 1 green | Open Motor Phase |

# 7 Reference Materials

## 7.1 Mechanical Outline·

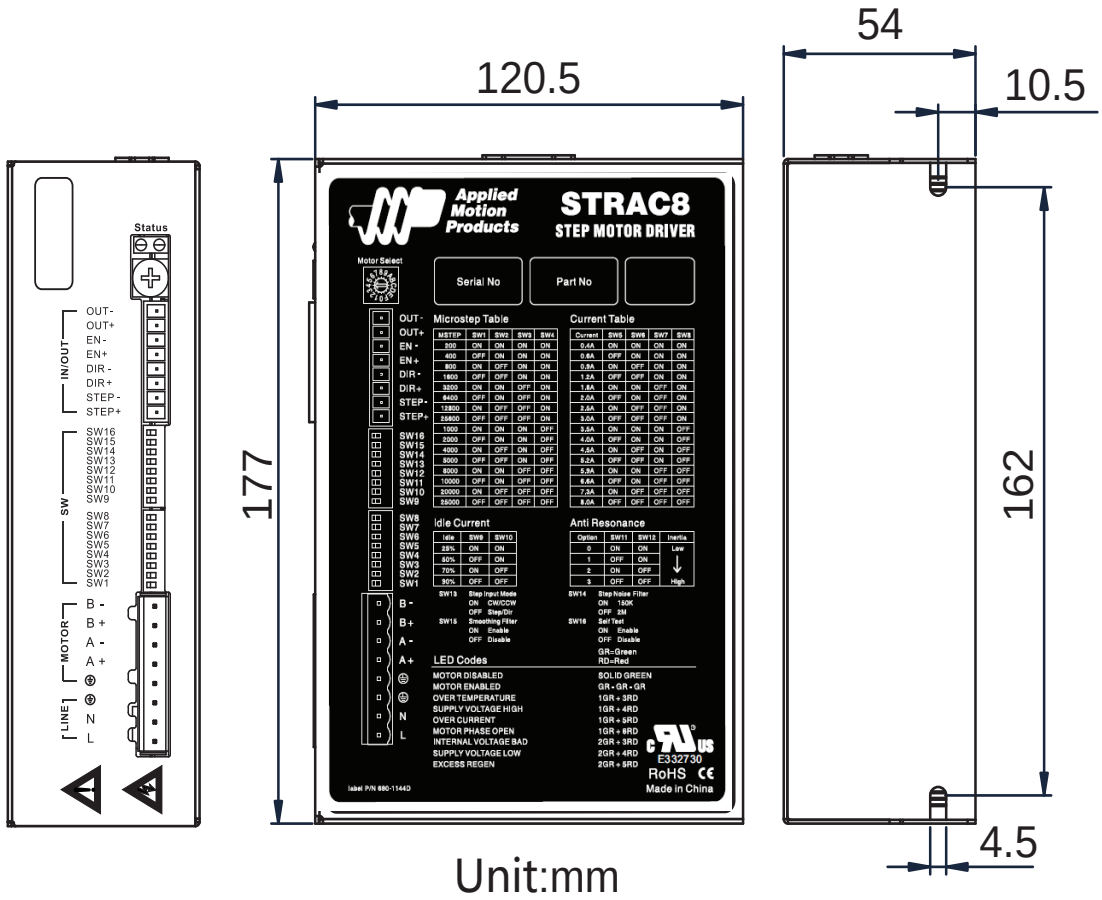

## 7.2 Specifications

### 7.2.1 Electrical Specifications

| Electrical Specifications | | | | | |
|---|---|---|---|---|---|
| Parameter | | Min. | Typ. | Max. | Unit |
| Power Supply | Universal AC input | 90 | - | 240 | VAC |
| Output Current (Peak) | | 0.4 | - | 8.0 | amps |
| Step Frequency | | 2 | - | 2M | Hz |
| STEP Minimum Pulse Width Hi and Low | | 250 | - | - | ns |
| DIR Minimum Pulse Width | | 62.5 | - | - | us |
| Under Voltage Protection | | - | 80 | - | VAC |
| Over Voltage Protection | | - | 295 | - | VAC |
| STEP/DIR Input Signal Voltage | | 4.0 | - | 28 | V |
| OUT Maximum Output Current | | - | - | 100 | mA |
| OUT Maximum Output | | - | - | 30 | V |

### 7.2.2 Environmental Specifications

| Environmental Specifications | |
|---|---|
| Heat Sinking Method | Natural cooling or fan-forced cooling |
| Surrounding Air Conditions | Avoid dust, oily mist and corrosive air |
| Operating Temperature | 0 - 40°C (32 - 104°F) |
| Maximum Ambient Humidity | 90% non-condensing |
| Shock | 5.9m/s² maximum |
| Storage Temperature | -10 - 70°C (14 - 158°F) |

# 8 Contacting Applied Motion Products

404 Westridge Dr.

Watsonville, CA 95076, USA

1-800-525-1609

Tel (831) 761-6555

www.applied-motion.com

**ASSEMBLY TITLE:** **COLLAPSIBLE REWIND ASSEMBLY**

**DRAWING NO.:** **D24398-000**

**GENERAL FUNCTION:**

- The rewind drum rolls up the liner
- The rewind arm turns in, allows the liner to be released from the rewind drum.
- The rewind flange supports and guides the liner.
- The friction clutch allows for slippage to accommodate for varying speeds between the drive roll and rewind drum.
- The adjusting knob controls the torque adjustment of the drum.

**SET UP AND ADJUSTMENTS:**

- Position the rewind flange slightly below the web path and lock with the set screw in the hub.
- When threading liner to the rewind, place the liner around the drum and arm, making sure that the arm is turned out.
- Tighten adjusting knob just enough to allow the rewind drum to keep up with the drive roll.

**NOTE:** Excessive tightening will cause the web to be wound very tight, causing difficulty in removal and possible step motor stall.

**MAINTENANCE:**

- Clean all parts that have acquired label or glue residue
- Replace friction disc when worn out.

**TROUBLESHOOTING:**

| PROBLEM | WHAT TO DO |
|---|---|
| - Rewind drum not rotating when stepping motor rotates | - Replace timing belt from motor to rewind |
| - Rewind drum not keeping up with drive roll | - Tighten adjusting knob |
| - Web winding too tight on hub | - Loosen adjusting knob |
| - Grinding in rewind hub | - Replace friction disc by removing knob and sliding off rewind drum |

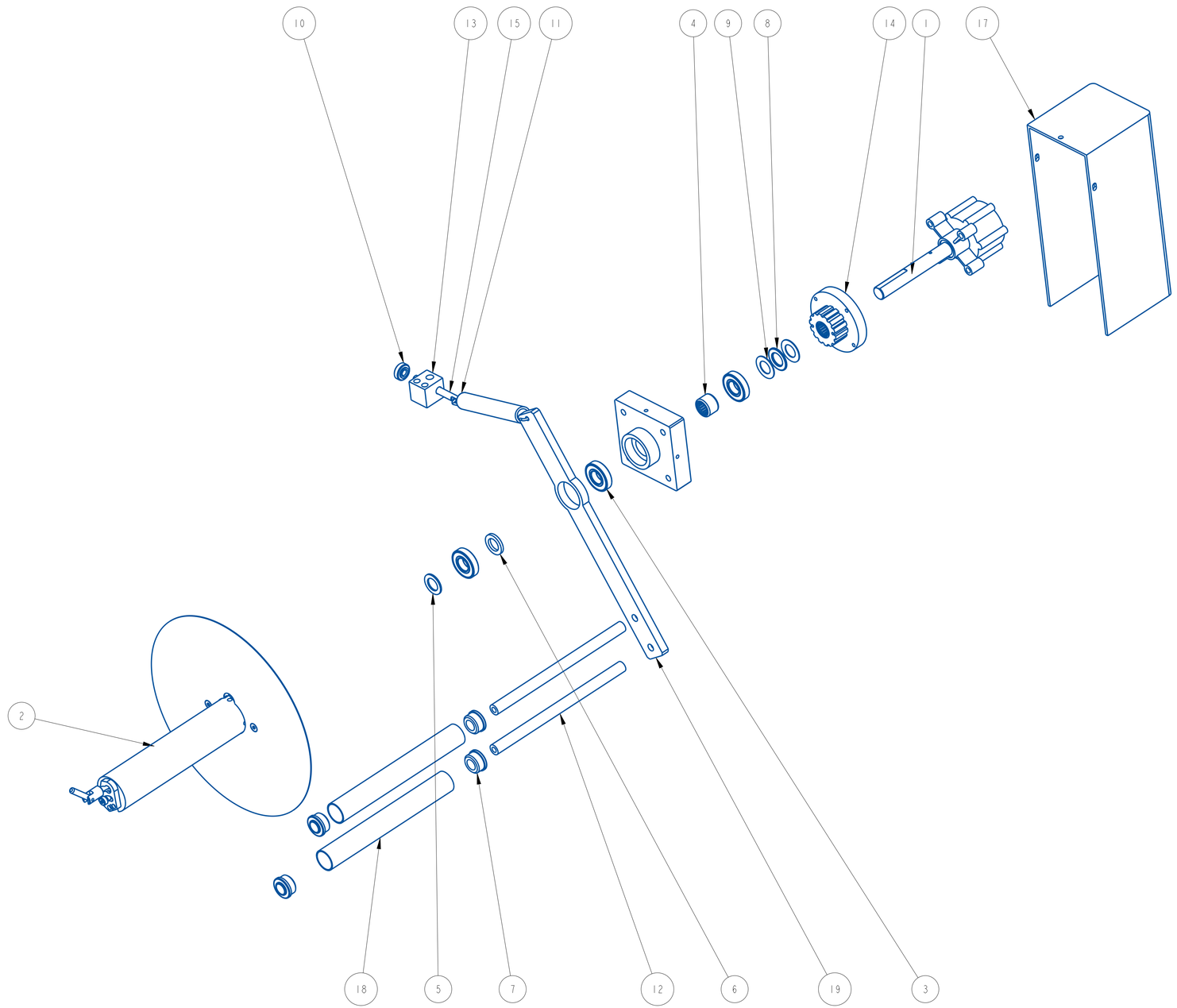


| ITEM | QTY | PART NO. | DESCRIPTION | PARENT ITEM |
|---|---|---|---|---|
| 1 | 1 | 20499-001 | DASHPOT & SHAFT ASSEMBLY | 23100R-007LH |
| 2 | 1 | 22188-000 | 7" COLLAPSIBLE REWIND ASSEMBLY | 23100R-007LH |
| 3 | 3 | 111075-000 | BEARING, BALL | 23100R-007LH |
| 4 | 1 | 121067-000 | BEARING, NEEDLE | 23100R-007LH |
| 5 | 1 | 151008-000 | BEARING, THRUST WASHER | 23100R-007LH |
| 6 | 1 | 151017-000 | BEARING, THRUST WASHER | 23100R-007LH |
| 7 | 4 | 181063-000 | BEARING, ROLL END | 23100R-007LH |
| 8 | 1 | 181081-000 | BEARING, NEEDLE ROLLER | 23100R-007LH |
| 9 | 2 | 181082-000 | BEARING, THRUST WASHER | 23100R-007LH |
| 10 | 1 | 801601-000 | CHECK NUT | 23100R-007LH |
| 11 | 1 | 811216-000 | EXTENSION SPRING, STAINLESS | 23100R-007LH |
| 12 | 2 | A20928-002 | ROLLER SHAFT | 23100R-007LH |
| 13 | 1 | A21479-000 | SPRING ADJUSTMENT BLOCK | 23100R-007LH |
| 14 | 1 | A22120-000 | REWIND PULLEY ASSEMBLY | 23100R-007LH |
| 15 | 1 | A23131-000 | STUD | 23100R-007LH |
| 16 | 1 | B20004-007 | REWIND BEARING PLATE | 23100R-007LH |
| 17 | 1 | B20005-120 | GUARD | 23100R-007LH |
| 18 | 2 | B20071-003 | IDLER ROLLER (DANCER) | 23100R-007LH |
| 19 | 1 | C20894-004 | REWIND DANCER ARM | 23100R-007LH |

| REV | DATE | DESCRIPTION | BY |
|---|---|---|---|
| A | 09/08/25 | NEW DRAWING | SEM |

THIS IS A PRO-ENGINEER DOCUMENT AND MAY NOT BE MODIFIED MANUALLY

UNLESS OTHERWISE SPECIFIED
DIMENSIONAL TOLERANCE
.X ± .1
.XX ± .01
.XXX ± .005
ANGLES ± 30'

SURFACE FINISH 125
BREAK ALL EDGES .005/.015
CORNER RADIUS .010/.030

QUADREL LABELING SYSTEMS
7670 JENTHER DRIVE
MENTOR, OHIO 44060
(440) 602-4700

SCALE: 3/8
DATE: 09/08/25
DRW BY: SEM
CHK BY: 09/08/2025-SEM
APPR BY:

REWIND & DANCER ASSEMBLY w/KINETROL, 7"

MAT'L

23100R-007LH

SHEET 1 OF 2

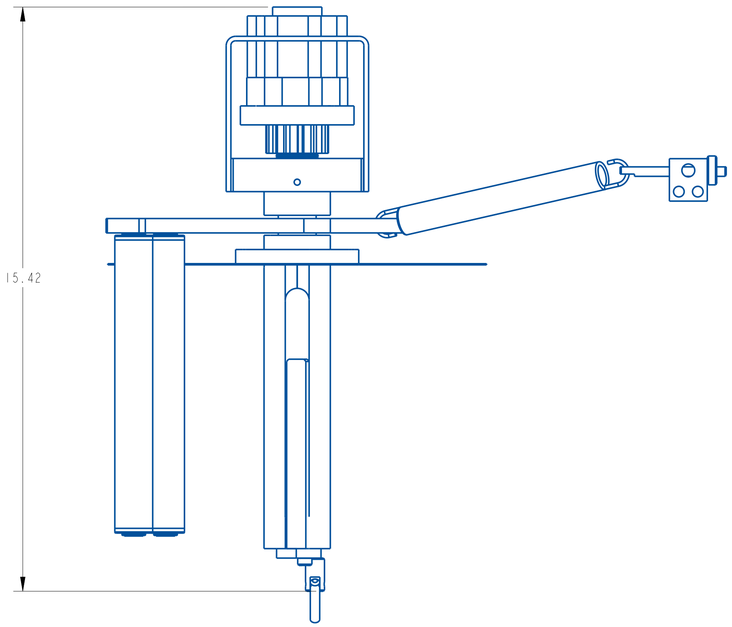


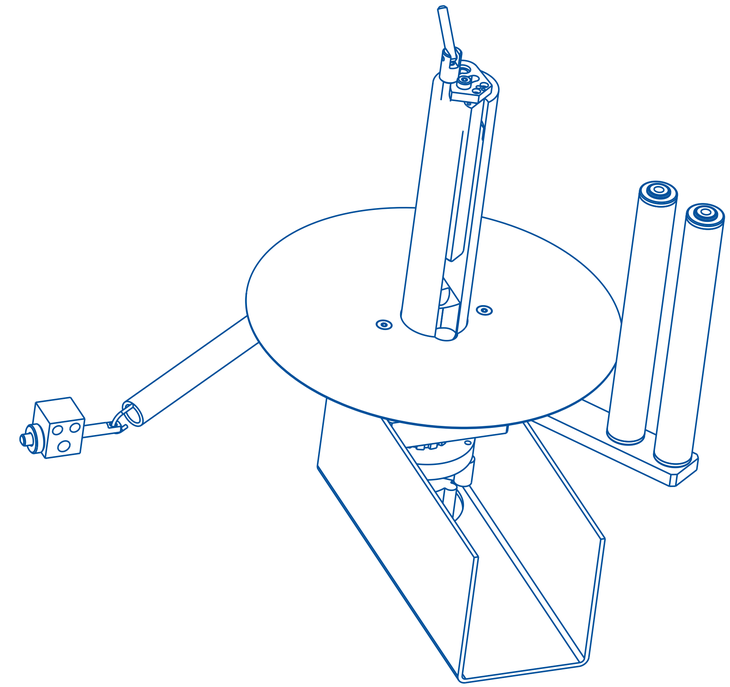

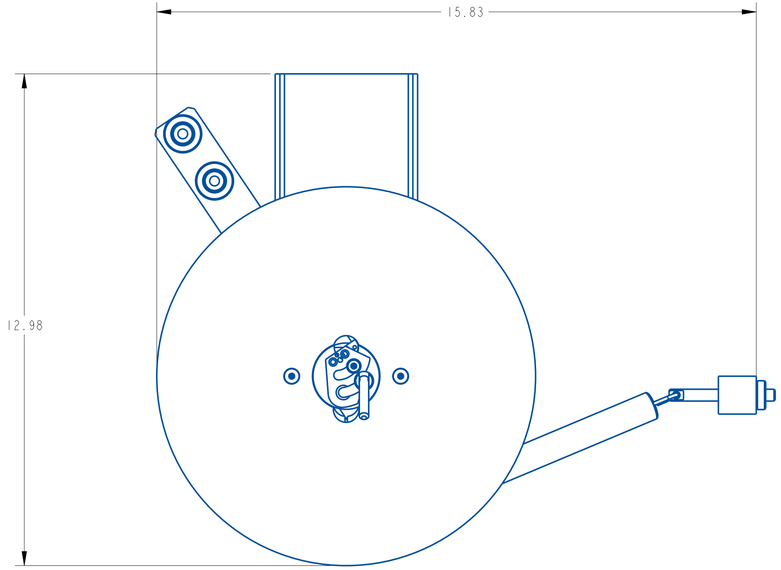


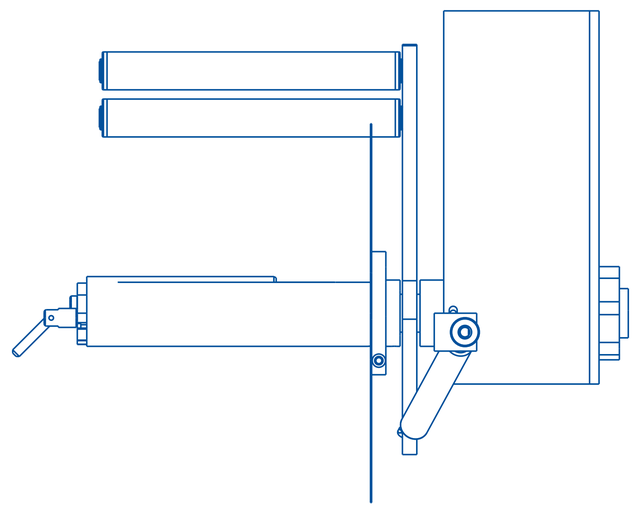

| REV | DATE | DESCRIPTION | BY |
|---|---|---|---|
| A | 09/08/25 | NEW DRAWING | SEM |

THIS IS A PRO-ENGINEER DOCUMENT AND MAY NOT BE MODIFIED MANUALLY

UNLESS OTHERWISE SPECIFIED
DIMENSIONAL TOLERANCE
.X ± .1
.XX ± .01
.XXX ± .005
ANGLES ± 30'

SURFACE FINISH 125
BREAK ALL EDGES .005/.015
CORNER RADIUS .010/.030
ALL ANGLES ARE 90°

QUADREL LABELING SYSTEMS
7670 JENTHER DRIVE
MENTOR, OHIO 44060
(440) 602-4700

SCALE: 1/2
DATE: 09/08/25
DRW BY: SEM
CHK BY: 09/08/2025 SEM
APPR BY:

REWIND & DANCER ASSEMBLY w/KINETROL, 7"

MAT'L

23100R-007LH

SHEET 2 OF 2

| ITEM | QTY | PART NO. | DESCRIPTION | PARENT ITEM |
|---|---|---|---|---|
| 1 | 1 | 22597-000 | COLLAPSIBLE REWIND LOCKING HANDLE | 22188-000 |
| 2 | 1 | A21226-000 | REWIND FLANGE HUB COLLAR | 22188-000 |
| 3 | 1 | A22085-001 | COLLAPSIBLE REWIND REEL | 22188-000 |
| 4 | 1 | B22103-003 | REWIND HUB 7" | 22188-000 |
| 5 | 1 | B22141-001 | SHAFT ASSEMBLY | 22188-000 |
| 6 | 2 | CSEE253 | | 22188-000 |
| 7 | 1 | CSSD0103 | | 22188-000 |

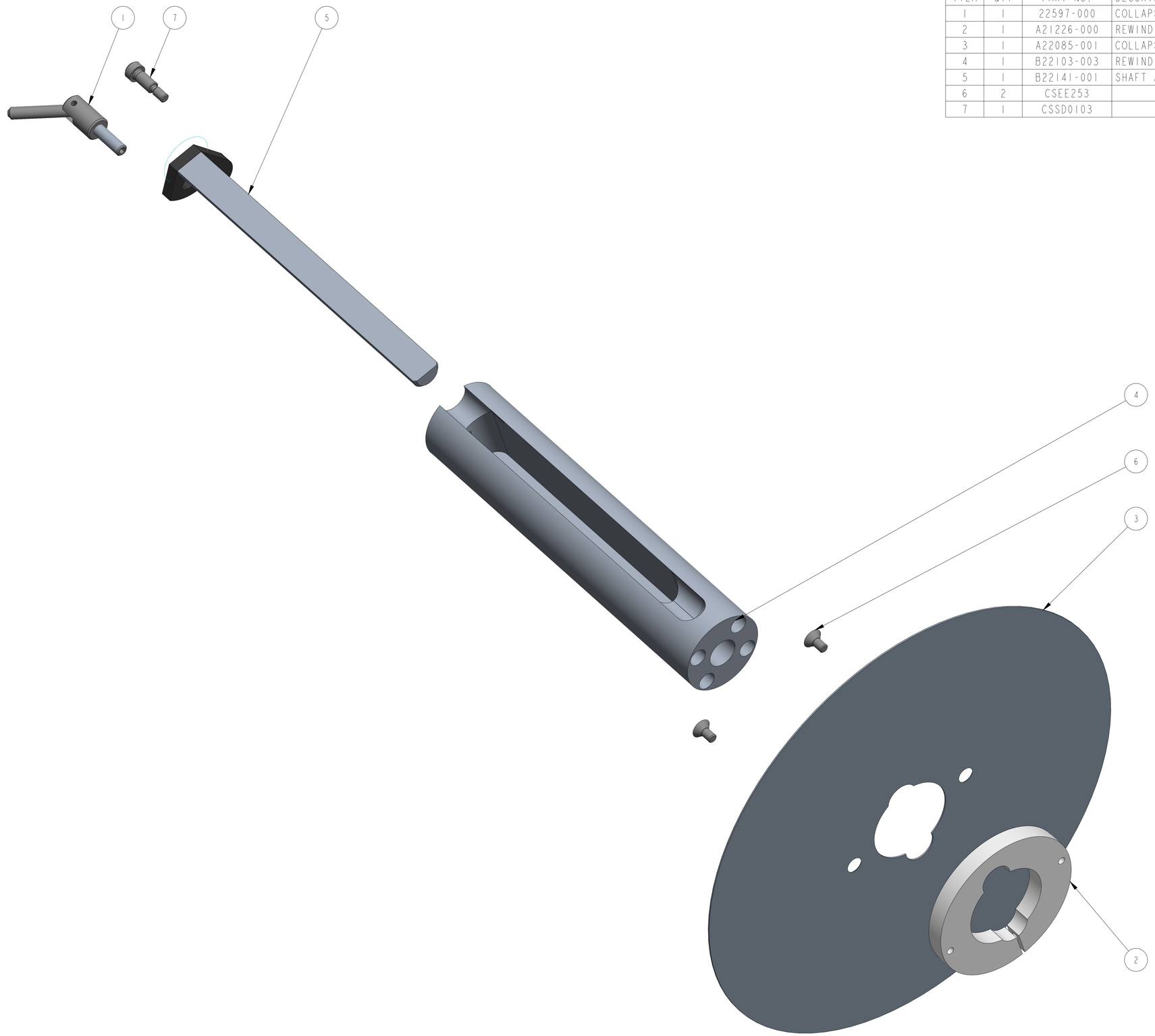


SHEET 1 OF 2

| REV | DATE | DESCRIPTION | BY |
|---|---|---|---|
| A | MAR-30-21 | NEW DRAWING | TJS |

THIS IS A PRO-ENGINEER DOCUMENT AND MAY NOT BE MODIFIED MANUALLY

UNLESS OTHERWISE SPECIFIED
DIMENSIONAL TOLERANCE
.X ± .1
.XX ± .01
.XXX ± .005
ANGLES ± 30'
SURFACE FINISH 125
BREAK ALL EDGES .005/.015
CORNER RADIUS .010/.030
ALL ANGLES ARE 90°

QUADREL LABELING SYSTEMS
7670 JENTHER DRIVE
MENTOR, OHIO 44060
(440) 602-4700

SCALE: 1/1
DATE: MAR-30-21
DRW BY: TJS
CHK BY:02/29/2024-SEM
APPR BY:

7" COLLAPSIBLE REWIND ASSEMBLY

MAT'L 22188-000

22188-000

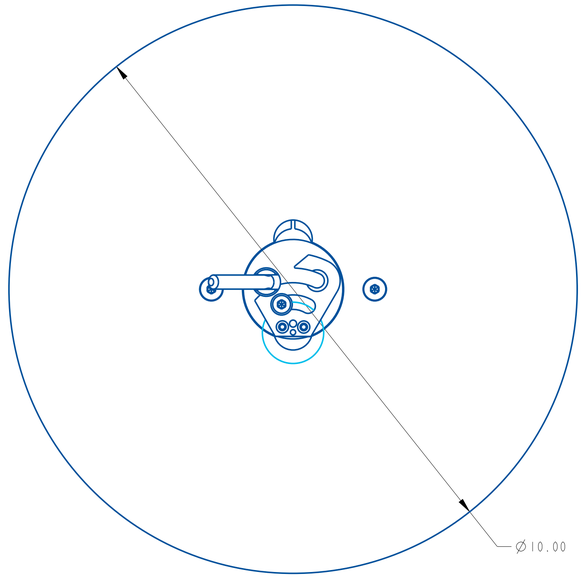


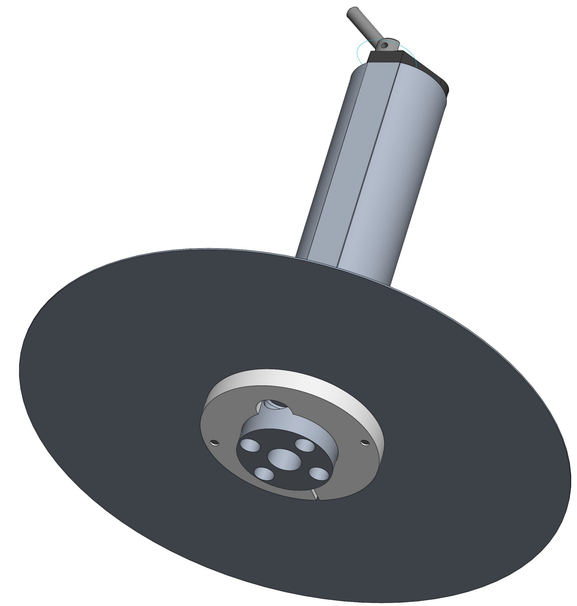

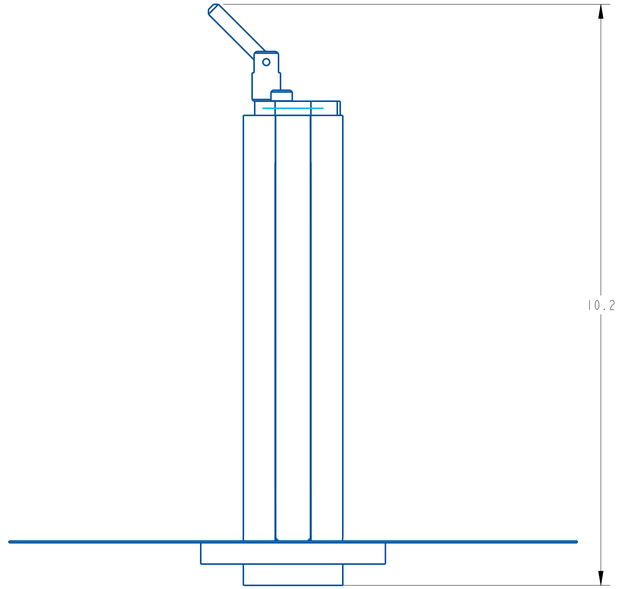


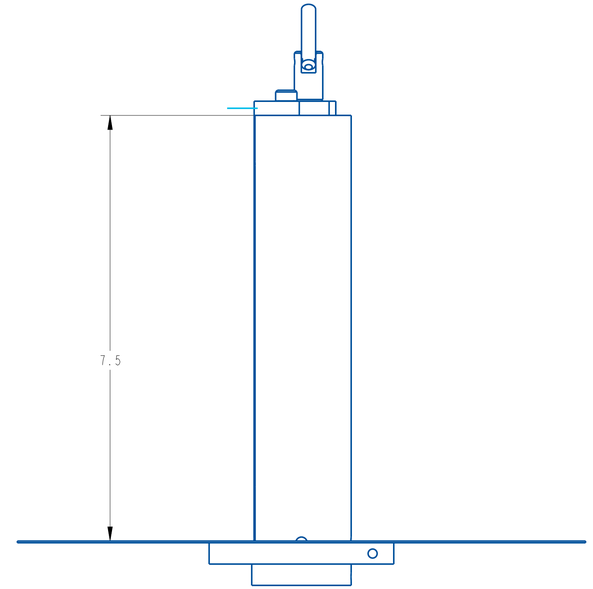


| REV | DATE | DESCRIPTION | BYE |
|---|---|---|---|
| A | MAR-30-21 | NEW DRAWING | TJS |

THIS IS A PRO-ENGINEER DOCUMENT AND MAY NOT BE MODIFIED MANUALLY

UNLESS OTHERWISE SPECIFIED
DIMENSIONAL TOLERANCE
X ± .1
XX ± .01
XXX ± .005
ANGLES ± 30'
SURFACE FINISH 125
BREAK ALL EDGES .005/.015
CORNER RADIUS .010/.030
ALL ANGLES ARE 90°

QUADREL LABELING SYSTEMS
7670 JENTHER DRIVE
MENTOR, OHIO 44060
(440) 602-4700

SCALE: 3/4
DATE: MAR-30-21
DRW BY: TJS
CHK BY: 02/29/2024-SEM
APPR BY:

7" COLLAPSIBLE REWIND ASSEMBLY

MAT'L 22188-000

22188-000

SHEET 2 OF 2

| ITEM | QTY | PART NO. | DESCRIPTION |
|---|---|---|---|
| 1 | 1 | 871352-000 | DOWELL,PIN 1/8" x 1/2" SS. |
| 2 | 1 | 871352-000 | DOWELL,PIN 3/32" x 1/2" SS. |
| 3 | 1 | A22081-000 | COLLAPSIBLE REWIND CAM |
| 4 | 1 | A25272-001 | COLLAPSIBLE REWIND SHAFT |
| 5 | 2 | #4-40X0-500 | SHCS #4-40 UNC 1/2" LG. |

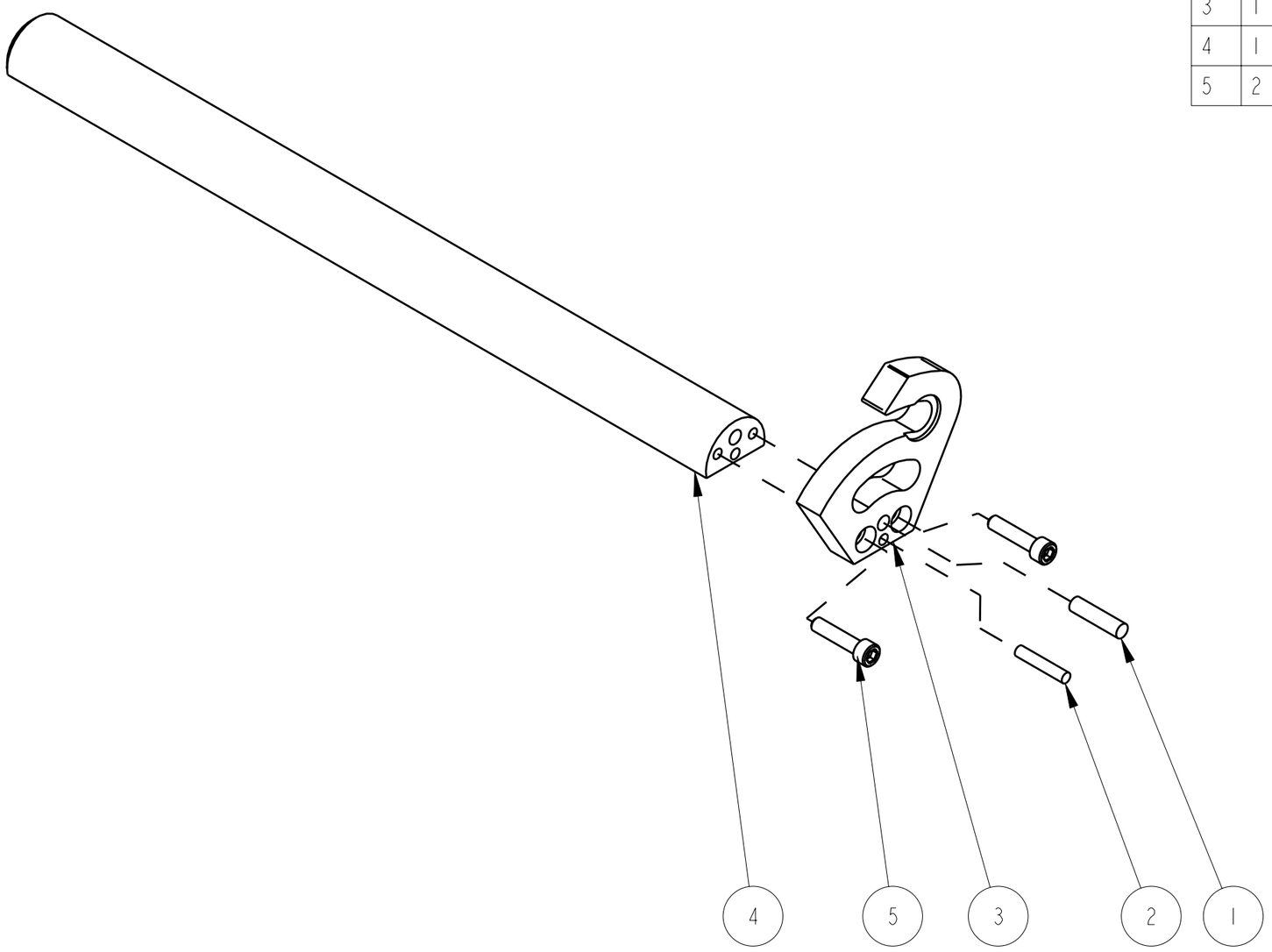


| REV | DATE | DESCRIPTION |
|---|---|---|
| A | 06/09/2008 | NEW DRAWING |

**THIS IS A PRO-ENGINEER DOCUMENT AND MAY NOT BE MODIFIED MANUALLY**

UNLESS OTHERWISE SPECIFIED
DIMENSIONAL TOLERANCE

.X ± .1
.XX ± .01
.XXX ± .005
ANGLES ± 30'

SURFACE FINISH 125
BREAK ALL EDGES .005/.015
CORNER RADIUS .010/.030


**QUADREL LABELING SYSTEMS**
7670 JENTHER DRIVE
MENTOR, OHIO 44060
(216) 975-0006


| | |
|---|---|
| SCALE: | 1/1 |
| DATE: | 06/09/2008 |
| DRW BY: | SEM |
| CHK BY: | |
| APPR BY: | |

SHAFT ASSEMBLY 7.0"

MAT'L

B22141-001

| ITEM | QTY | PART NO. | DESCRIPTION |
|---|---|---|---|
| 1 | 1 | 871352-000 | DOWELL,PIN 1/8" x 1/2" SS. |
| 2 | 1 | A26128-000 | CLEVIS |
| 3 | 1 | A26129-000 | HANDLE |
| 4 | 1 | SYE601 | 1/4-20 X 1-1/4 LG. SET SCREW |

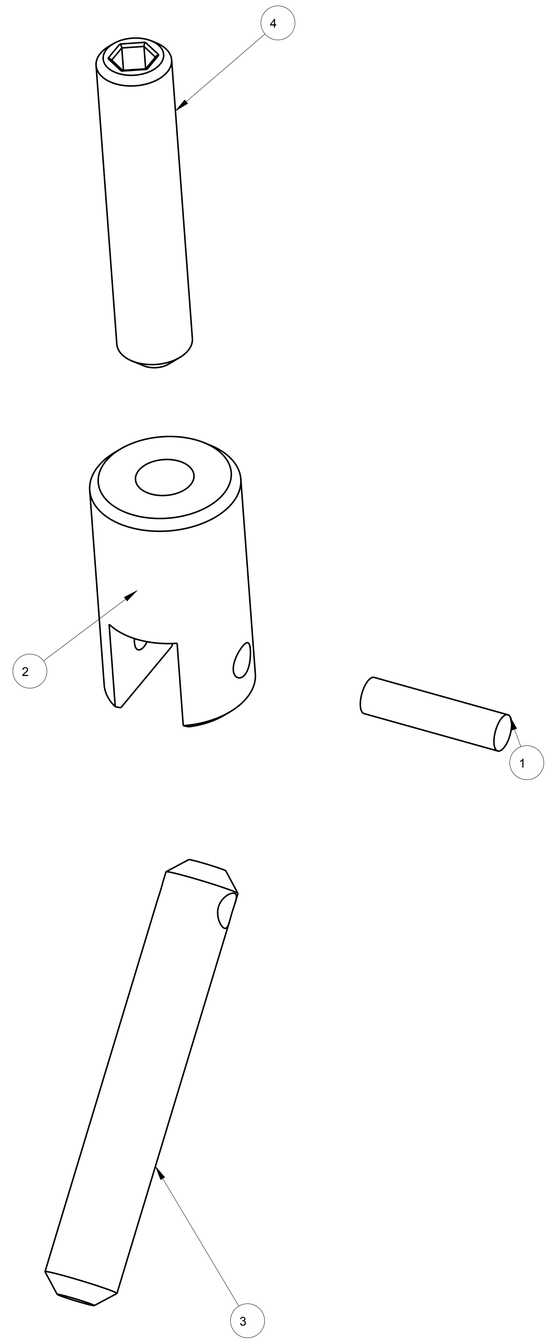


| REV | DATE | DESCRIPTION | BY |
|---|---|---|---|
| A | 12-11-14 | NEW DRAWING | |

THIS IS A PRO-ENGINEER DOCUMENT AND MAY NOT BE MODIFIED MANUALLY

UNLESS OTHERWISE SPECIFIED
DIMENSIONAL TOLERANCE
.X± .1
.XX± .01
.XXX± .005
ANGLES ± 30'

SURFACE FINISH 125
BREAK ALL EDGES .005/.015
CORNER RADIUS .010/.030

QUADREL LABELING SYSTEMS
7670 JENTHER DRIVE
MENTOR, OHIO 44060
(440) 602-4700

SCALE 4/1
DATE 12-11-14
DRAWN BY ATT

COLLAPSIBLE REWIND LOCKING HANDLE

MAT'L 22597-000

22597-000

SHEET 1 OF 2

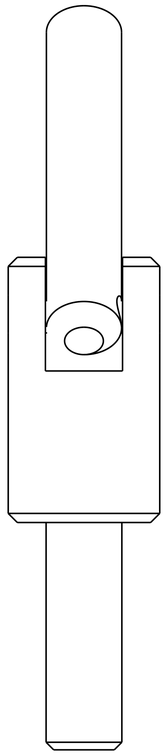

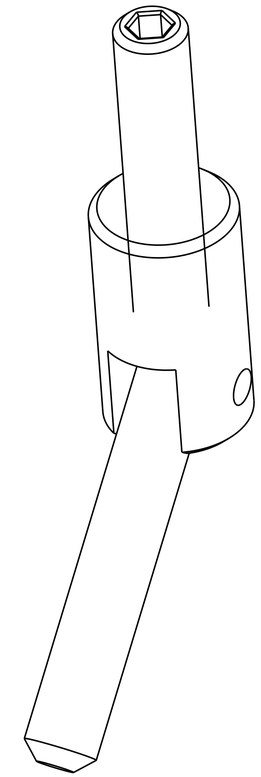

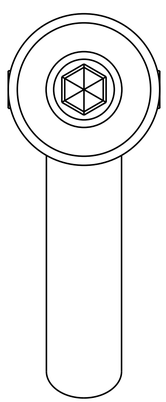

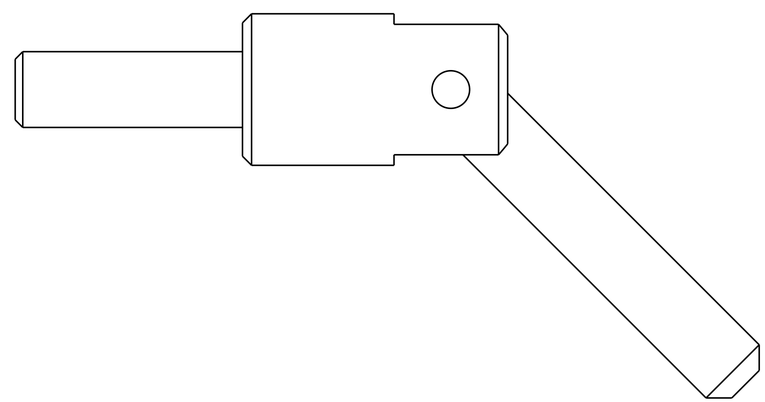

| REV | DATE | DESCRIPTION | BY |
|---|---|---|---|
| A | 12-11-14 | NEW DRAWING | |

THIS IS A PRO-ENGINEER DOCUMENT AND MAY NOT BE MODIFIED MANUALLY

UNLESS OTHERWISE SPECIFIED
DIMENSIONAL TOLERANCE

X± .1
XX± .01
XXX± .005
ANGLES ± 30'

SURFACE FINISH 125
BREAK ALL EDGES .005/.015
CORNER RADIUS .010/.030

QUADREL LABELING SYSTEMS
7670 JENTHER DRIVE
MENTOR, OHIO 44060
(440) 602-4700

| | |
|---|---|
| SCALE | 4/1 |
| DATE | 12-11-14 |
| DRAWN BY | ATT |

COLLAPSIBLE REWIND LOCKING HANDLE

MAT'L 22597-000

22597-000

SHEET 2 OF 2

**ASSEMBLY TITLE:** **SLOT SENSOR ASSEMBLY**

**GENERAL FUNCTION:**

- The slot sensor detects the separation between labels. This signals the electronics to stop the drive motor.
- The two (2) liner support rods prevent the liner from wearing out the slot sensor.
- The knob and thumbscrew lock the sensor firmly on the mounting rods.
- The male connector provides quick connection to the labeling head.

**SET UP AND ADJUSTMENTS:**

- See attached cut sheet

**MAINTENANCE:**

- Keep the sensor optical area clean from label and glue residue

**TROUBLESHOOTING:**

| PROBLEM | WHAT TO DO |
|---|---|
| - No power to the sensor | - Check male connector and tightly secure connection to the head. |
| - Liner dragging over the slot | - Loosen knob and rotate slot sensor slot sensor surface liner rests on both support rods |
| - Too much slack through slot sensor | - Adjust brake brush tension |
| - Slot sensor moving with web | - Tighten all three (3) adjusting knobs |

| ITEM | QTY | PART NO. | DESCRIPTION | PARENT ITEM |
|---|---|---|---|---|
| 1 | 1 | 201444-300 | TRITRONICS MODEL LERC | 20033-300 |
| 2 | 2 | 801297-000 | THUMB SCREW PLSTC HEAD 8-32x1 | 20033-300 |
| 3 | 2 | 801299-000 | KNOB WITH STUD | 20033-300 |
| 4 | 1 | A21391-301 | SLOT SENSOR ADAPTER | 20033-300 |
| 5 | 4 | A21749-300 | SLOT SENSOR SUPPORT ROD MTG BLOCK | 20033-300 |
| 6 | 2 | A21770-300 | SUPPORT ROD WITH FLAT | 20033-300 |
| 7 | 1 | B20852-300 | 7 IN. WEB SLOT SENSOR MTG. BAR | 20033-300 |
| 8 | 1 | 203035-000 | CABLE, M8, 4COND | NOT SHOWN |

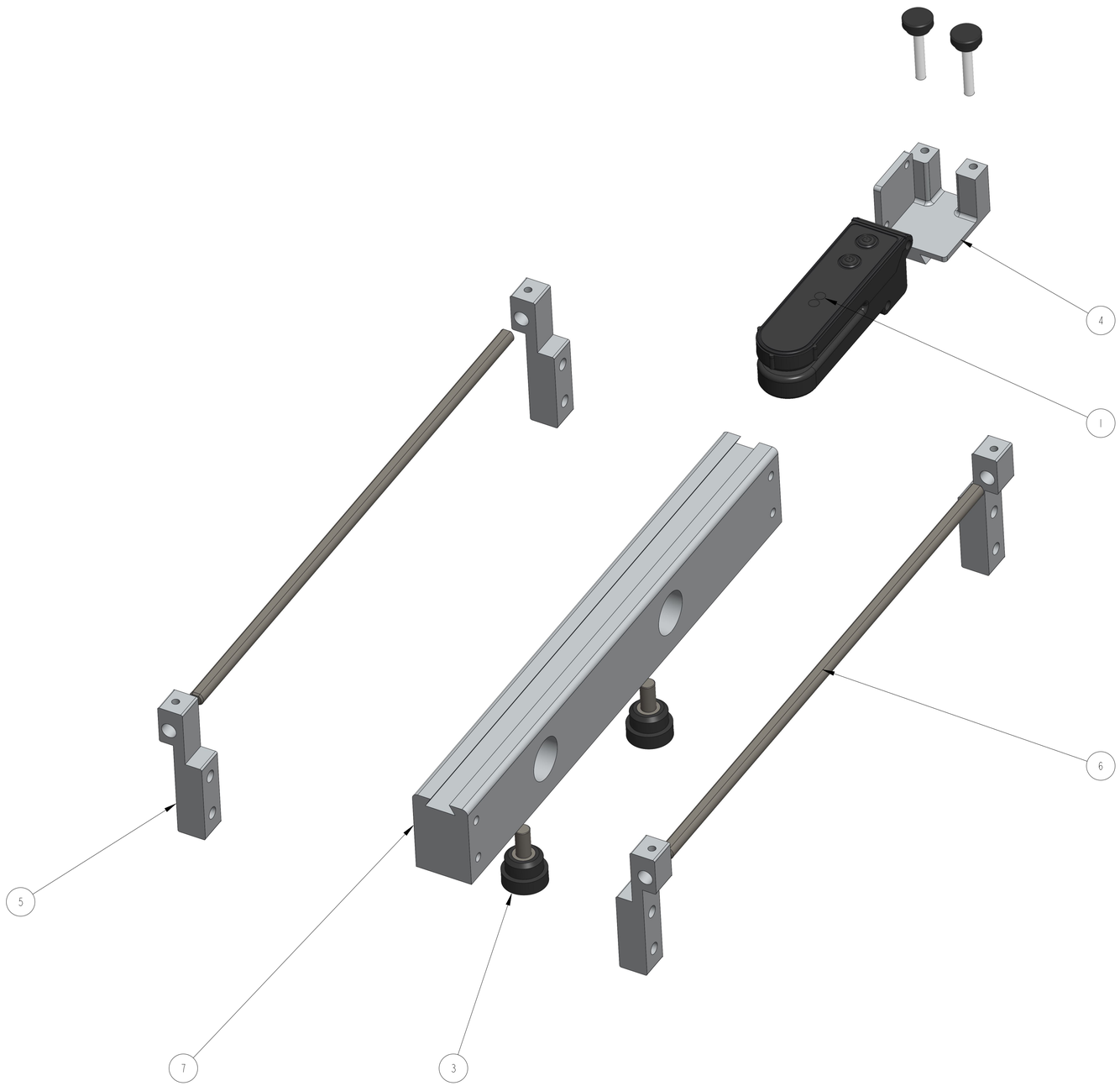


| REV | DATE | DESCRIPTION | BY |
|---|---|---|---|
| A | Mar-04-21 | NEW DRAWING | TJS |

THIS IS A PRO-ENGINEER DOCUMENT AND MAY NOT BE MODIFIED MANUALLY

UNLESS OTHERWISE SPECIFIED
DIMENSIONAL TOLERANCE
X ± .1
XX ± .01
XXX ± .005
ANGLES ± 30°

SURFACE FINISH 125
BREAK ALL EDGES .005/.015
CORNER RADIUS .010/.030

QUADREL LABELING SYSTEMS
7670 JENTHER DRIVE
MENTOR, OHIO 44060
(440) 602-4700

SCALE: 1/1
DATE: Mar-04-21
DRW BY: TJS
CHK BY: 02/24/2024-SEM
APPR BY:

LABEL DETECT ASSEMBLY

MAT'L

20033-300

SHEET 1 OF 2

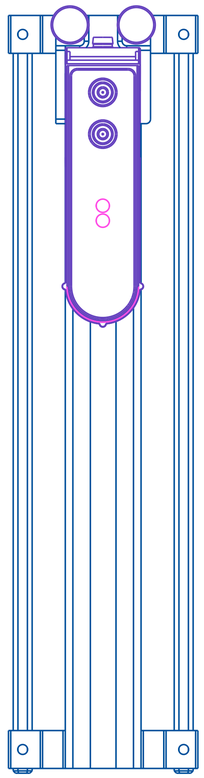

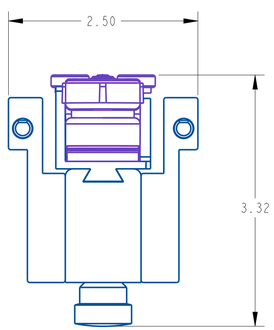


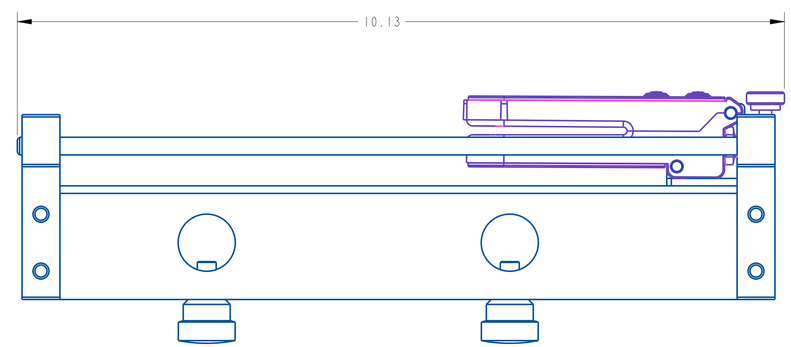


| REV | DATE | DESCRIPTION | BY |
|---|---|---|---|
| A | Mar-04-21 | NEW DRAWING | TJS |

THIS IS A PRO-ENGINEER DOCUMENT AND MAY NOT BE MODIFIED MANUALLY

UNLESS OTHERWISE SPECIFIED
DIMENSIONAL TOLERANCE
.X ± .1
.XX ± .01
.XXX ± .005
ANGLES ± 30'
SURFACE FINISH 125
BREAK ALL EDGES .005/.015
CORNER RADIUS .010/.030
ALL ANGLES ARE 90°

QUADREL LABELING SYSTEMS
7670 JENTHER DRIVE
MENTOR, OHIO 44060
(440) 602-4700

SCALE: 1/1
DATE: Mar-04-21
DRW BY: TJS
CHK BY:02/24/2024-SEM
APPR BY:

LABEL DETECT ASSEMBLY

MAT'L

20033-300

SHEET 2 OF 2

# LABEL•EYE
# Set-Up Instructions

## Standard LABEL•EYE

**Normal Label Opacity AUTOSET Button**
This category includes most paper or melallized film labels adhering to paper or transparent backing materials. To implement the one button AUTOSET routine, utilize the external alignment guides to position the gap between labels in line with the dot shown in the center of the detection zone. Then push the AUTOSET button marked "Normal."

An alternative set up procedure would be to remove a label and the push the "Normal" AUTOSET button.

On rare occasions, when the light is unable to penetrate the backing materials, both the red and green led indicators will blink four times. When this indication occurs, the sensor will be unable to detect the presence of the labels.

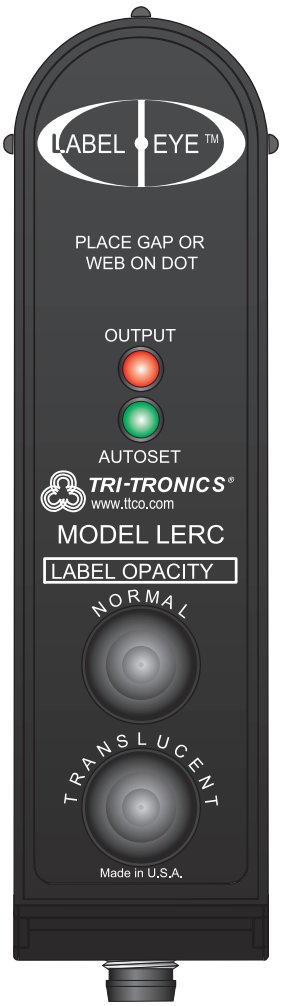


**Translucent Label Opacity AUTOSET Button**
This category includes translucent labels adhering to transparent or paper backing materials. To implement the one button AUTOSET routine, utilize the external alignment guides to position the gap between labels in line with the dot shown in the center of the detection zone. Then push the AUTOSET button marked "Translucent".
*Note: This sensor cannot detect transparent labels.*

**INVERT OUTPUT:** The status of the red LED and output transistors can be inverted by pressing both buttons simultaneously. When the output status has been inverted, the red LED and the output transistors will turn off when the label comes into view.

TRI-TRONICS®

# SPECIFICATIONS

**SUPPLY VOLTAGE**
- 10 to 30Vdc
- Polarity Protected
- Intended for use in class two circuits

**CURRENT REQUIREMENTS**
- 45 milliamps (exclusive of load)

**OUTPUT TRANSISTORS**
- (1) NPN and (1) PNP output transistors
- Sensor outputs can sink or source up to 150 milliamps (current limit)
- All outputs are continuously short circuit protected

**REMOTE AUTOSET INPUT**
- opto isolated momentary sinking input (10 milliamps)

*Note: Remote models only*

**RESPONSE TIME**
- Light state response = 100 microseconds
- Dark state response = 100 microseconds

**LED LIGHT SOURCE**
- High intensity red LED
- Pulse modulated

**PUSH BUTTON CONTROL**
- Automatic set-up routines based on web opacity
- One push button set-up
- Simultaneously pushing both buttons inverts the output

**HYSTERESIS**
- Minimal hysteresis promotes the detection between the backing material and the label depending on the settings

**LIGHT IMMUNITY**
- Responds to sensor's pulsed modulated light source … immune to most ambient light

**INDICATORS**
- Green LED flashes when AUTOSET routine is activated and stays illuminated when AUTOSET is completed
- Red LED illuminates when sensors output transistors are ON. *Note: The status of the output transistors can be inverted by pushing both buttons simultaneously. If Output LED flashes, a short circuit condition exists.*

**AMBIENT TEMPERATURE**
- -40°C to 70°C (-40°F to 158°F)

**RUGGED CONSTRUCTION**
- Chemical resistance to harsh cleaners such as detergents, alcohols, and ketones
- Type 1 Enclosure
- Conforms to heavy industry grade CE and UL requirements

RoHS Compliant
Product subject to change without notice.

**Model Numbers:**

| Label•Eye | Description |
|---|---|
| LER | Red LED, 4 Conductor 6ft Cable |
| LERC | Red LED, 4-pin M8 Connector |
| LERR | Red LED, 5 Conductor, 6ft Cable |
| LERRC-M12 | Red LED, 5-Pin M12 Pigtail Connector |
| LERC-M12 | Red LED, 4-Pin M12 Pigtail Connector |

**Nano Cable (M8) Selection Guide**

| P/N | Length | Thread Coupling |
|---|---|---|
| GEC-6 | 6ft (1.8m | Straight Female |
| GEC-15 | 15ft (4.6m) | Straight Female |
| RGEC-6 | 6ft (1.8m) | 90° Female |
| RGEC-15 | 15ft (4.6m) | 90° Female |

# DIMENSIONS

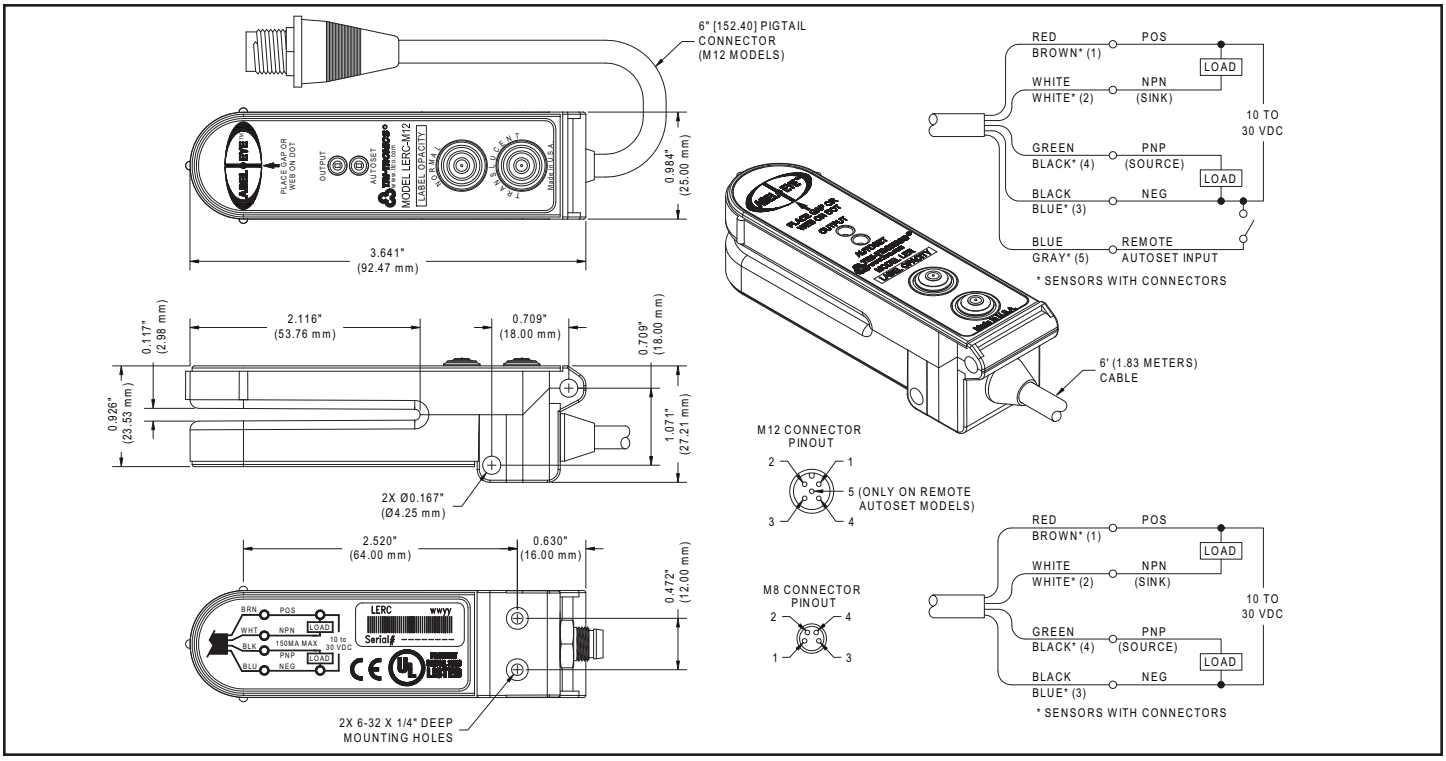



TRI-TRONICS®
P.O. BOX 25135, TAMPA, FL 33622-5135
813-886-4000 / 800-237-0946
ttco.com / info@ttco.com

**ASSEMBLY TITLE: SLOT SENSOR ASSEMBLY**

**GENERAL FUNCTION:**

- The slot sensor detects the separation between labels. This signals the electronics to stop the drive motor.
- The two (2) liner support rods prevent the liner from wearing out the slot sensor.
- The knob and thumbscrew lock the sensor firmly on the mounting rods.
- The male connector provides quick connection to the labeling head.

**SET UP AND ADJUSTMENTS:**

- With the labeling head threaded and the proper label flag at the peel plate, slide the slot sensor along the guide rods and tighten it just past a label division (away from the peel plate)
- Apply main power and remove label material from sensor forks
- Turn sensitivity screw on slot sensor 15 turns CCW. The indicator light will be off.
- Remove a label from the label liner and place the liner only portion between the sensor forks.
- Turn the sensitivity screw CW until the indicator light turns ON.
- Then turn the sensitivity screw CW 2 more full turns.
- Correct set up is achieved when the indicator lamp is OFF through the entire label surface and ON when the division between labels passes between the sensor forks.

**MAINTENANCE:**

- Keep the sensor optical area clean from label and glue residue

**TROUBLESHOOTING:**

| PROBLEM | WHAT TO DO |
|---|---|
| - No power to the sensor | - Check male connector and tightly secure connection to the head. |
| - Liner dragging over the slot | - Loosen knob and rotate slot sensor slot sensor surface liner rests on both support rods |
| - Too much slack through slot sensor | - Adjust brake brush tension |
| - Slot sensor moving with web | - Tighten all three (3) adjusting knobs |

| ITEM | QTY | PART NO. | DESCRIPTION | PARENT ITEM |
|---|---|---|---|---|
| 1 | 1 | 201369-000 | SLOT SENSOR, 42mm L X 5mm W | 20033-302 |
| 2 | 2 | 801297-000 | SLOT SENSOR, 42mm L X 5mm W | 20033-302 |
| 3 | 2 | 801299-000 | SLOT SENSOR, 42mm L X 5mm W | 20033-302 |
| 4 | 1 | A21391-302 | SLOT SENSOR, 42mm L X 5mm W | 20033-302 |
| 5 | 4 | A21749-300 | SLOT SENSOR, 42mm L X 5mm W | 20033-302 |
| 6 | 2 | A21770-300 | SLOT SENSOR, 42mm L X 5mm W | 20033-302 |
| 7 | 1 | B20852-300 | SLOT SENSOR, 42mm L X 5mm W | 20033-302 |

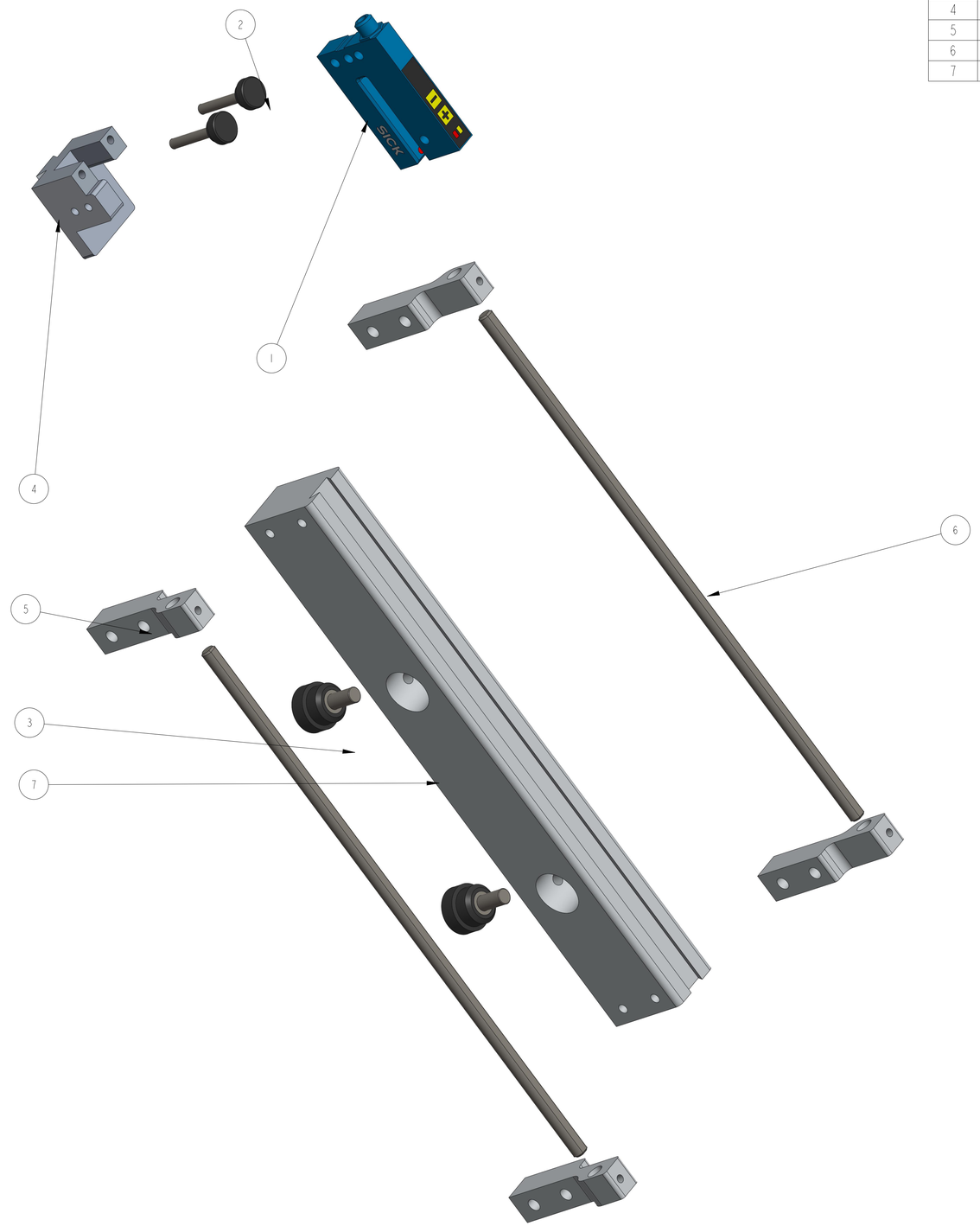


| REV | DATE | DESCRIPTION | BY |
|---|---|---|---|
| A | Mar-04-21 | NEW DRAWING | TAZ |

THIS IS A PRO-ENGINEER DOCUMENT AND MAY NOT BE MODIFIED MANUALLY

UNLESS OTHERWISE SPECIFIED
DIMENSIONAL TOLERANCE
.X ± .1
.XX ± .01
.XXX ± .005
ANGLES ± 30°

SURFACE FINISH 125
BREAK ALL EDGES .005/.015
CORNER RADIUS .010/.030

QUADREL LABELING SYSTEMS
7670 JENTHER DRIVE
MENTOR, OHIO 44060
(440) 602-4700

| | |
|---|---|
| SCALE | 1/1 |
| DATE | Mar-04-21 |
| DRAWN BY | TAZ |

LABEL DETECT ASSEMBLY

MAT'L

20033-302

20033-302

SHEET 1 OF 2

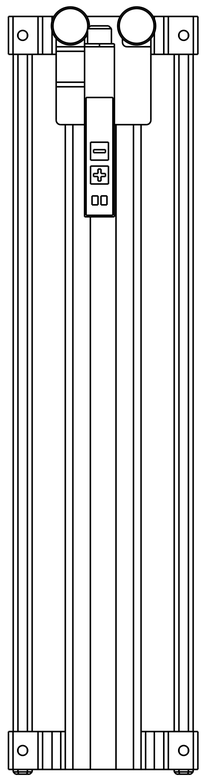

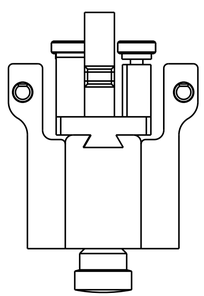

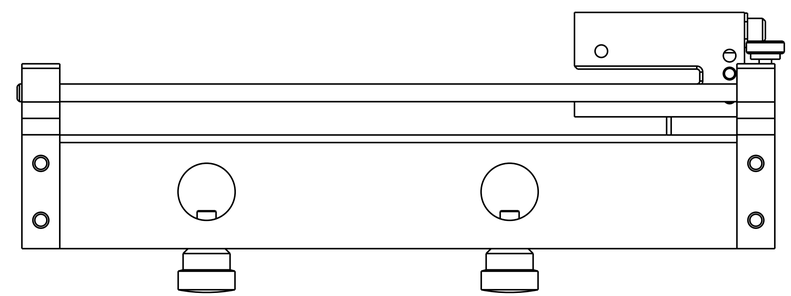

| REV | DATE | DESCRIPTION | BY |
|---|---|---|---|
| A | Mar-04-21 | NEW DRAWING | TJS |

THIS IS A PRO-ENGINEER DOCUMENT AND MAY NOT BE MODIFIED MANUALLY

UNLESS OTHERWISE SPECIFIED
DIMENSIONAL TOLERANCE
X ± .1
XX ± .01
XXX ± .005
ANGLES ± 30'

SURFACE FINISH 125
BREAK ALL EDGES .005/.015
CORNER RADIUS .010/.030

QUADREL LABELING SYSTEMS
7670 JENTHER DRIVE
MENTOR, OHIO 44060
(440) 602-4700

| | |
|---|---|
| SCALE | 1/1 |
| DATE | Mar-04-21 |
| DRAWN BY | TJS |

LABEL DETECT ASSEMBLY

MAT'L 20033-302

20033-302

SHEET 2 OF 2

**ENGLISH**

**Fork Sensor**
with infrared light
**Operating Instructions**

## Safety Specifications

- ▶ Read the operating instructions before starting operation.
- ▶ Connection, assembly, and settings only by competent technicians.
- ▶ Protect the device against moisture and soiling when operating.
- ▶ No safety component in accordance with EU machine guidelines.

## Proper Use

The WF Fork Sensor is an optoelectronic sensor, which works with a sender and receiver unit. It is used for optical, non-contact detection of objects, labels and marks.

## Starting Operation

**1** L: light-switching; if light received, output (Q) switches.
D: dark-switching, if light interrupted, output (Q) switches.

**2** Connect and secure cable receptacle tension-free. The following apply for connection in **B**: brn=brown, blu=blue, blk=black, wht=white.
Connect cables.

**3** Mount sensor with mounting holes to a suitable fixture and align it roughly.
Connect sensor to operating voltage (see type label); the LED signal strength indicator must light in accordance with **3**.
The material speed must be zero (machine is idle).
Adjustment of light reception:
(explanation describes mode L: light-switching).

**3 A** Only XXB410:
The LED signal strength indicator (yellow) lights continuously when there is optimum light reception. If it does not light, too little light is received: Increase the sensitivity using the "+" key.
Checking object detection:
Place object in light beam; the LED signal strength indicator (yellow) must switch off. If it remains lit, reduce the sensitivity on the "–" key until it switches off. The LED signal strength indicator (yellow) must light again after the object has been removed. If this is not the case, correct the sensitivity using the "+" key until the switching threshold is set correctly.

**3 B** Only XXB416:
First Teach-in procedure:
press the "+" and "–" keys simultaneously for 1 s. The LED signal strength indicator (red) blinks.
Second Teach-in procedure:
press the "–" key for 1 s. The LED signal strength indicator (red) switches off.
If the red LED blinks, repeat the Teach-in procedure.
After the Teach-in procedure has been completed, the switching threshold can be modified using the "+" or "–" key.

**3 C** The device can be locked against unintentional activation if you press the "+" and "-" keys simultaneously (3 s).

**3 D** The dark/light switching can be set if you press the "+" and "–" keys simultaneously (6 s).

## Maintenance

SICK photoelectric switches do not require any maintenance. We recommend that you clean the external lens surfaces and check the screw connections and plug-in connections at regular intervals.

**DEUTSCH**

**Gabel-Lichtschranke**
mit unsichtbarem Infrarotlicht
**Betriebsanleitung**

## Sicherheitshinweise

- ▶ Vor der Inbetriebnahme die Betriebsanleitung lesen.
- ▶ Anschluss, Montage und Einstellung nur durch Fachpersonal.
- ▶ Gerät bei Inbetriebnahme vor Feuchte und Verunreinigung schützen.
- ▶ Kein Sicherheitsbauteil gemäß EU-Maschinenrichtlinie.

## Bestimmungsgemäße Verwendung

Die Gabel-Lichtschranke WF ist ein opto-elektronischer Sensor, der mit einer Sende- und Empfangseinheit arbeitet. Sie wird zum optischen, berührungslosen Erfassen von Objekten, Etiketten und Marken eingesetzt.

## Inbetriebnahme

**1** L: hellschaltend, bei Lichtempfang schaltet Ausgang (Q).
D: dunkelschaltend, bei Lichtunterbrechung schaltet Ausgang (Q).

**2** Leitungsdose spannungsfrei aufstecken und festschrauben. Für Anschluss in **B** gilt: brn=braun, blu=blau, blk=schwarz, wht=weiß.
Leitungen anschließen.

**3** Sensor mit Befestigungsbohrungen an geeignete Halter montieren und grob ausrichten.

# SICK

8 009 814.0305 GO KE

# SENSICK
# WF next

We reserve the right to make changes without prior notification
Änderungen vorbehalten
Angegebene Produkteigenschaften und technische Daten stellen keine Garantieerklärung dar
Sous réserve de modifications
Reservam-se alterações
Ret til ændringer forbeholdes
Con riserva di modifiche
Wijzigingen voorbehouden
Reservado el derecho a introducir modificaciones
经改装

Sensor an Betriebsspannung legen (s. Typenaufdruck); Funktionsanzeige muss leuchten gemäß **3**.
Materialgeschwindigkeit gleich Null (Maschine steht).
Justage Lichtempfang:
(Erläuterung beschreibt Modus L: hellschaltend).

**3 A** Nur XXB410:
Bei optimalem Lichtempfang leuchtet die Funktionsanzeige (gelb) permanent. Leuchtet sie nicht, wird zuwenig Licht empfangen: Empfindlichkeit mit „+"-Taste erhöhen.
Kontrolle Objekterfassung:
Objekt in den Strahlengang bringen, die Funktionsanzeige (gelb) muss erlöschen. Erlöscht sie nicht, die Empfindlichkeit an der „–"-Taste reduzieren, bis sie erlöscht. Nach Entfernen des Objektes muss die Funktionsanzeige (gelb) wieder aufleuchten; ist dies nicht der Fall, Empfindlichkeit mit „+"-Taste korrigieren, bis die Schaltschwelle korrekt eingestellt ist.

**3 B** Nur XXB416:
Erster Teach-in-Vorgang:
„+"- und „–"-Tasten gleichzeitig für 1 s betätigen. Funktionsanzeige (rot) blinkt.
Zweiter Teach-in-Vorgang:
„–"-Taste für 1 s betätigen. Funktionsanzeige (rot) erlöscht. Blinkt die rote Funktionsanzeige, Teach-in-Vorgang wiederholen.
Nach Abschluss des Teach-in-Vorgangs kann die Schaltschwelle per „+"- oder „–"-Taste eingestellt werden.

**3 C** Durch gleichzeitiges Drücken der „+"- und „–"-Tasten (3 s), kann das Gerät gegen unbeabsichtigtes Betätigen verriegelt werden.

**3 D** Durch gleichzeitiges Drücken der „+"- und „–"-Tasten (6 s), kann die Hell-/Dunkelschaltung eingestellt werden.

## Wartung

SICK-Lichtschranken sind wartungsfrei. Wir empfehlen, in regelmäßigen Abständen
- die optischen Grenzflächen zu reinigen,
- Verschraubungen und Steckverbindungen zu überprüfen.

**A**

**WF2-XX*B410/416**
**WF5-XX*B410/416**
**WF15-XX*B410/416**
**WF30-XX*B410/416**

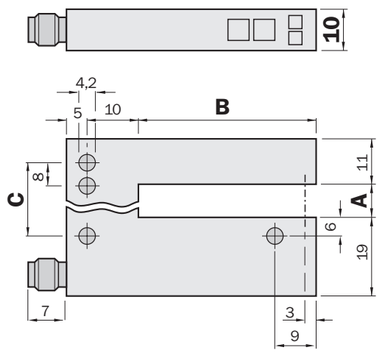


**WF50-XX*B410/416**
**WF80-XX*B410/416**
**WF120-XX*B410/416**

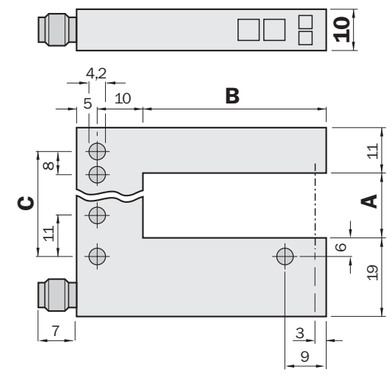


**WFX-XX*B410**

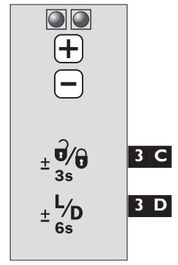


**WFX-XX*B416**

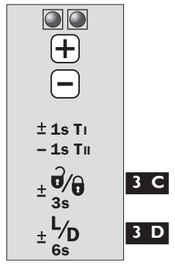


| | A (mm) | B (mm)* | C (mm) |
|---|---|---|---|
| **WF 2** | **2** | 42/59/95 | 14 |
| **WF 5** | **5** | 42/59/95 | 14 |
| **WF 15** | **15** | 42/59/95 | 27 |
| **WF 30** | **30** | 42/59/95 | 42 |
| **WF 50** | **50** | 42/59/95 | 51 |
| **WF 80** | **80** | 42/59/95 | 81 |
| **WF 120** | **120** | 42/59/95 | 121 |

**B**

**WFX-XX*B410**

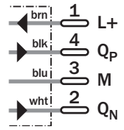


**WFX-XX*B416**

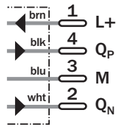


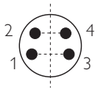


**1**

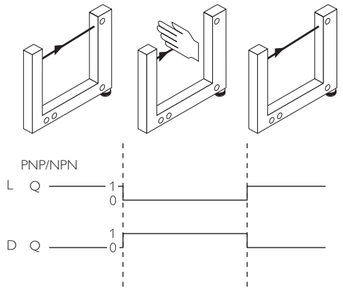


**2**

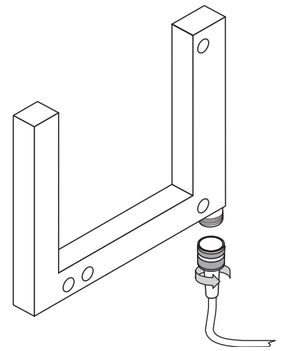

**3 A**

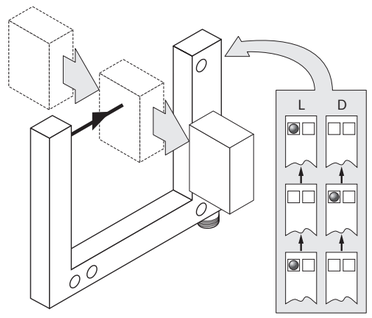


**3 B**

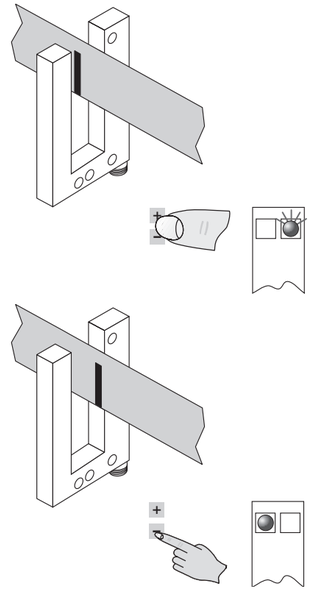


| WF | | | | | -XXB410/416 |
|---|---|---|---|---|---|
| Fork width | Gabelweite | Passage | Distancia de detecção | Gaffelbredde | 2 / 5 / 15 / 30 / 50 / 80 / 120 mm |
| Supply voltage $U_V$ | Versorgungsspannung $U_V$ | Tension d'alimentation $U_V$ | Tensão de força $U_V$ | Forsyningsspænding $U_V$ | DC 10 ... 30 V |
| Output current $I_{max}$ | Ausgangsstrom $I_{max}$ | Courant de sortie $I_{maxi}$ | Corrente de saí da $I_{máx}$ | Udgangsstrøm $I_{max}$ | 100 mA |
| Signal sequence | Schaltfolge | Fréquence | Sequência de sinais | Signalfølge | 10000/s |
| Initialisation time | Initialisierungszeit | Temps d'initialisation | Tempo de inicialização | Initialiseringstid | 100 ms |
| Response time | Ansprechzeit | Temps de réponse | Tempo de reação | Responstid | ≤ 100 µs |
| Enclosure rating | Schutzart | Type de protection | Tipo de proteção | Tæthedsgrad | IP 65 |
| VDE protection class | VDE Schutzklasse | Classe de protection VDE | Classe de proteçãoVDE | VDE beskyttelsesklasse | III |
| Circuit protection 1) | Schutzschaltungen 1) | Circuits de protection 1) | Circuitos protetores 1) | Beskyttelseskoblinger 1) | A, B, C |
| Ambient operating temperature | Betriebsumgebungs-temperatur | Température ambiante | Temperatura ambiente de operação | Driftsomgivelses-temperatur | – 20 … + 60 ° C |

1) A = $V_S$ connections reverse polarity protected
B = Outputs protected against short circuits
C = Interference pulse suppression

1) A = $U_V$-Anschlüsse verpolsicher
B = Ausgänge kurzschlussfest
C = Störimpulsunterdrückung

1) A = Raccordements Uv protégés contre les inversions de polarité
B = Sorties protégées contre les courts-circuits
C = Suppression des impulsions parasites

1) A = Conexões Uv protegidas contra inversão de polos
B = Saídas protegidas contra curto circuito
C = Supressão de impulsos parasitas

1) A = Uv-tilslutninger med
B = Udgange kortslutningsresistent
C = Støjimpulsundertrykkelse

| WF | | | | -XXB410/416 |
|---|---|---|---|---|
| Invaco | Vorkafstand | Distancia de detección | 叉形宽度 | 2 / 5 / 15 / 30 / 50 / 80 / 120 mm |
| Tensione di alimentatione $U_V$ | Voedingsspanning $U_V$ | Tension d'alimentation $U_V$ | 电源电压 $U_V$ | DC 10 ... 30 V |
| Corrente di uscita max. $I_{max}$ | Uitgangsstroom $I_{max}$ | Corriente de salida $I_{max}$ | 输出电流 $I_{max}$ | 100 mA |
| Sequenza signali | Signalenreeks | Secuencia de señales | 信号流 | 10000/s |
| Tempo di inizializzazione | Initialiseringstijd | Tiempo de inicialización | 初始启动时间 | 100 ms |
| Tempo di risposta | Aanspreektijd | Tiempo de reacción | 触发时间 | ≤ 100 µs |
| Tipo di protenzione (IEC 144) | Beveiligingswijze (IEC 144) | Tipo de protección (IEC 144) | 保护种类 (IEC 144) | IP 65 |
| Classe di protezione VDE | VDE Beveiligingsklasse | Protección clase VDE | VDE 保护级别 | III |
| Commutazioni di protezione 1) | Beveiligingsschakelingen 1) | Circuitos de protección 1) | 保护电路 1) | A, B, C |
| Temperatura ambiente circostante | Bedrijfsomgevings-temperatuur | Temperatura ambiente de servicio | 工作环境-温度 | – 20 … + 60 ° C |

1) A = Uv-collegamenti con protez. contro inversione di poli
B = Uscite a prova di corto circuito
C = Soppressione impulsi di disturbo

1) A = Uv-aansluitingen beveiligd tegen verkeerd polen
B = Uitgangen beveiligd tegen kortsluitingt
C = Storingsimpuls-onderdrukking

1) A = Conexiones Uv a prueba de inversión de polaridad
B = Salidas resistentes al cortocircuito
C = Represión de impulso de interferencia

1) A = $U_V$-接头防反接
B = 输出端抗过流-及短路
C = 消除干扰脉冲

## FRANÇAIS

**Barrière lumineuse à fourche**
avec rayons infrarouge
**Instructions de Service**

### Conseils de sécurité

- ▶ Lire les Instructions de Service avant la mise en marche.
- ▶ Installation, raccordement et réglage ne doivent être effectués que par du personnel qualifié.
- ▶ Lors de la mise en service, protéger l'appareil de l'humidité et des saletés.
- ▶ N'est pas un composant de sécurité au sens de la directive européenne concernant les machines.

### Utilisation correcte

La barrière lumineuse à fourche WF est un capteur optoélectronique fonctionnant à l'aide d'une unité émettrice et réceptrice. On l'utilise pour la détection optique sans contact d'objets, d'étiquettes ou de repères.

### Mise en service

**1** L: commutation claire, la sortie (Q) connecte à la réception de lumière.
D: commutation sombre, la sortie (Q) connecte lorsque le trajet lumineux est interrompu.

**2** Enficher la boîte à conducteurs sans aucune tension et la visser.
Pour le raccordement dans **B** on a: brn=brun, blu=bleu, blk=noir, wht=blanc.
Raccorder les conducteurs.

**3** Installer le capteur muni de trous de fixation sur des supports appropriés, et l'ajuster grossièrement.
Appliquer la tension de service au capteur (voir inscription indiquant le modèle); le témoin de fonctionnement doit s'allumer comme en **3**.
Vitesse du matériel égale à zéro (la machine est arrêtée).
Ajustement réception de la lumière:
(la légende décrit le mode L: commutation claire).

**3 A** Seulement XXB410:
Lorsque la réception est optimale, le témoin de fonctionnement (jaune) est allumé en permanence. Si ce n'est pas le cas, c'est que la lumière reçue est insuffisante: augmenter la sensibilité à l'aide de la touche "+".
Contrôle Détection d'objet:
Amener un objet sur la trajectoire du rayon lumineux, le témoin de fonctionnement (jaune) doit s'éteindre. Si ce n'est pas le cas, réduire la sensibilité à la touche "–" jusqu'à ce que le témoin s'éteigne. Lorsqu'on enlève l'objet, le témoin de fonctionnement (jaune) doit de nouveau s'allumer; si ce n'est pas le cas, corriger la sensibilité avec la touche "+" jusqu'à ce que le seuil de commutation soit correctement réglé.

**3 B** Seulement XXB416:
Première procédure d'Apprentissage:
Actionner simultanément les touches "+" et "–" pendant 1 s. Le témoin de fonctionnement (rouge) clignote.
Deuxième procédure d'Apprentissage:
Actionner la touche "–" pendant 1 s. Le témoin de fonctionnement (rouge) s'éteint.
Si le témoin de fonctionnement (rouge) clignote, répéter la procédure d'apprentissage.
Une fois la procédure d'apprentissage terminée, on peut effectuer l'ajustement du seuil de commutation au moyen de "+" et "–".

**3 C** En appuyant simultanément sur les touches "+" et "–" (3 s), on peut verrouiller l'appareil contre tout actionnement involontaire.

**3 D** En appuyant simultanément sur les touches "+" et "–" (6 s), on peut régler l'appareil sur la commutation claire ou la commutation sombre.

### Maintanance

Les barrières lumineuses SICK ne nécessitent pas d'entretien.
Nous recommandons, à intervalles réguliers
- de nettoyer les surfaces optiques,
- de contrôler les assemblages vissés et les connexions à fiche et à prise.

## PORTUGUÊS

**Sensor de forquilha**
com luz infra-vermelha
**Instruções de operação**

### Instruções de segurança

- ▶ Antes do comissionamento dev ler as instruções de operação.
- ▶ Conexões, montagem e ajuste devem ser executados exclusivamente por pessoal devidamente qualificado.
- ▶ Guardar o aparelho ao abrigo de umidade e sujidade.
- ▶ Não se trata de elemento de segurança segundo a Diretiva Máquinas da União Européa.

### Utilização devida

O sensor de forquilha WF é um sensor óptico-electrônico, que trabalha com uma unidade emissora e receptora. É utilizado para captar opticamente e sem contato objectos, etiquetas e marcas.

### Comissionamento

**1** L: Ativado com luz, a saída (Q) está ativada quando recebe luz.
D: Ativado quando escuro, a saída (Q) é ativada quando a luz está interrompida.

**2** Enfiar a caixa de cabos sem torções e aparafusá-la.
Para a ligação elétrica em **B** é: brn=marron, blu=azul, blk=preto, wht=branco.
Fazer a cablagem elétrica.

**3** Montar o sensor mediante os furos de fixação num suporte apropriado.
Ligar o sensor à tensão operacional (ver identificação do tipo); a luz operacional deve estar acesa; o indicador de funcionamento deverá acender-se de acordo com **3**.
A velocidade do material é igual a zero (a máquina está parada). Ajuste da recepção luminosa:
(a explicação descreve o modo L: de ligação clara).

**3 A** Só XXB410:
Com a melhor recepção possível de luz, o indicador de funcionamento (amarelo) acende em luz permanente. Se não acender, a luz recebida é insuficiente: aumentar a sensibilidade com a tecla „+".
Controle da captação do objeto:
Colocar o objeto no trajeto de incidência dos raios, o indicador de funcionamento (amarelo) tem que apagar. Se não apagar, reduzir a sensibilidade na tecla „–", até que apague. Depois de remover o objeto, o indicador de funcionamento (amarelo) tem que acender de novo; se não for o caso, corrigir a sensibilidade com a tecla „+" , até o ponto de ligação estar regulado corretamente.

**3 B** Só XXB416:
Primeiro processo de Teach-in:
acionar simultaneamente as teclas „+"- e „–" durante 1 s. O indicador de funcionamento (vermelho) pisca.
Segundo processo de Teach-in:
acionar a tecla „–" durante 1 s. O indicador de funcionamento (vermelho) apaga-se.
Se indicador de funcionamento (vermelho) piscar, repetir o processo de Teach-in.
Depois de concluído o processo de Teach-in, o ponto de ligação pode ser ajustado com mediante a tecla „+"- ou „–".

**3 C** Acionando simultaneamente as teclas „+"- e „–" (3 s), o aparelho pode ser travado para evitar o acionamento involuntário.

**3 D** Acionando simultaneamente as teclas „+"- e „–" (6 s), pode ser ajustada ligação clara/escura.

### Manutenção

As barreiras de luz SICK não requerem manutenção.
Recomendamos que se faça, em intervalos regulares,
- a limpeza das superfícies óticas,
- e um controle às conexões roscadas e uniões de conetores.

## DANSK

**Gaffelfotocelle**
med infrarød lys
**Driftsvejlening**

### Sikkerhedsforskrifter

- ▶ Driftsvejledningen skal gennemlæses før idrifttagning.
- ▶ Tilslutning, montage og indstilling må kun foretages af fagligt personale.
- ▶ Apparatet skal beskyttes mod fugtighed og snavs ved idrifttagningen.
- ▶ Ingen sikkerhedskomponent iht. EU-maskindirektiv.

### Beregnet anvendelse

Gaffelfotocellen WF er en opto-elektronisk sensor, der arbejder med en sende- og modtageenhed. Den anvendes til optisk, berøringsfri registrering af objekter, etiketter og mærker.

### Idriftagning

**1** L:bliver lys, ved lysmodtagelse kobler udgang (Q).
D: bliver mørk, ved lysafbrydelse kobler udgang (Q).

**2** Ledningsdåse monteres spændingsfri og skrues fast.
For tilslutning i **B** gælder: brn=brun, blu=blå, blk=sort, wht=hvid.
Ledninger tilsluttes.

**3** Sensor med fastgørelseshuller monteres på egnede holdere og rettes foreløbigt til.
Føler forbindes med driftsspænding (se typebetegnelse); funktionslampen skal lyse i overensstemmelse med **3**.
Materialehastighed lig nul (maskinen står stille). Justering af lysmodtagelse:
(forklaringen beskriver modus L: aktiv ved lys).

**3 A** Kun XXB410:
Ved optimal lysmodtagelse lyser funktionslampen (gul) permanent. Hvis den ikke lyser, modtages der for lidt lys: Forøg følsomheden med „+"-tasten.
Kontrol af objektregistrering:
Placér objektet i strålegangen, funktionslampen (gu) skal gå ud. Hvis den ikke går ud, skal følsomheden reduceres med „–"-tasten, til den går ud. Når objektet er blevet fjernet, skal funktionslampen (gul) lyse igen, hvis det ikke er tilfældet, skal følsomheden korrigeres med „+"-tasten, til koblingstærsklen er indstillet korrekt.

**3 B** Kun XXB416:
Første Teach-in-proces:
Tryk samtidigt på „+"- og „–"-tasterne i 1 sek. Funktionslampen (rød) blinker.
Anden Teach-in-proces:
Tryk på „–"-tasten i 1 sek. Funktionslampen (rød) går ud.
Hvis den funktionslampen (rød) blinker, skal Teach-in-processen gentages.
Når Teach-in-processen er afsluttet, kan koblingstærsklen justeres med „+"- eller „–"-tasten.

**3 C** Ved at trykke på „+"- und „–"-tasterne samtidigt (3 sek.), kan enheden låses mod utilsigtet aktivering.

**3 D** Ved at trykke på „+"- und „–"-tasterne samtidigt (6 sek.), kan man indstille, om enheden skal være aktiv ved lys/mørke.

### Vedligeholdelse

SICK-fotoceller kræver ingen vedligeholdelse. Vi anbefaler, at
- de optiske grænseflader rengøres
- forskruninger og stikforbindelser kontrolleres med regelmæssige mellemrum.

## ITALIANO

**Sensore a forcella**
con luce infrarossa
**Instruzioni per l'uso**

### Avvertimenti di sicurezza

- ▶ Leggere prima della messa in esercizio.
- ▶ Allacciamento, montaggio e regolazione solo da parte di personale qualificato.
- ▶ Durante la messa in esercizio proteggere da umidità e sporcizia.
- ▶ Non componente di sicurezza secondo la Direttiva macchine EN.

### Impiego conforme allo scopo

Il sensore a forcella WF è un sensore optoelettronico dotato di un'unità emittente e di un'unità ricevente. Viene utilizzato per il rilevamento ottico senza contatto di oggetti, etichette e demarcazioni.

### Messa in esercizio

**1** L: commutazione a chiaro, con ricezione di luce commuta l'uscita (Q).
D: commutazione a scuro, con cessazione di luce commuta l'uscita (Q).

**2** Inserire scatola esente da tensione e avvitare stringendo.
Per collegamento **B** osservare: brn=marrone, blu=blu, blk=nero, wht=bianco.
Collegare i cavi.

**3** Con i fori di fissaggio montare il sensore a un supporto adatto e allinearlo grossolanamente.
Allacciare sensore a tensione di esercizio (cf. stampigliatura); l'indicatore di funzionamento deve essere acceso come da punto **3**.
Velocità del materiale pari a zero (macchina ferma).
Aggiustare la ricezione luce:
(la descrizione si riferisce alla modalità L: commutazione a chiaro).

**3 A** Solo XXB410:
Quando la ricezione è ottimale l'indicatore di ricezione (giallo) è acceso con luce fissa. Se l'indicatore è spento, la ricezione è insufficiente: aumentare la sensibilità con il tasto "+".
Verifica rilevamento oggetto:
Portare l'oggetto nel raggio di luce; l'indicatore di funzionamento (giallo) deve spegnersi. Se non si spegne, ridurre la sensibilità con il tasto "–" finché si spegne. Dopo la rimozione dell'oggetto l'indicatore di funzionamento (giallo) deve riaccendersi; se non si riaccende, correggere la sensibilità con il tasto "+" fino ad impostare il limite di commutazione corretto.

**3 B** Solo XXB416:
Primo Teach-in:
Premere contemporaneamente i tasti "+" e "–" per 1 s. L'indicatore di funzionamento (rosso) lampeggia.
Secondo Teach-in:
Premere il tasto "–" per 1 s. L'indicatore di funzionamento (rosso) si spegne.
Se l'indicatore di funzionamento (rosso) lampeggia, ripetere il Teach-in.
Una volta completato il Teach-in si può procedere all'impostazione della soglia di commutazione con i tasti "+" o "–".

**3 C** Premendo contemporaneamente i tasti "+" e "–" (3 s), si inserisce il blocco di protezione dall'attivazione involontaria.

**3 D** Premendo contemporaneamente i tasti "+" e "–" (6 s), si imposta la commutazione a chiaro/a scuro.

### Manutenzione

Le barriere luminose SICK non richiedono manutenzione. Si consiglia
- di pulire regolarmente le superfici limite ottiche,
- di controllare regolarmente gli avvitamenti e i collegamenti a spina.

## NEDERLANDS

**Vork-fotocel**
met infraroodlicht
**Gebruiksaanwijzing**

### Veiligheidsvoorschriften

- ▶ Lees voor de ingebruikneming de gebruiksaanwijzing.
- ▶ Aansluiting, montage en instelling alleen door vakbekwaam personeel laten uitvoeren.
- ▶ Apparaat voor ingebruikneming tegen vocht en verontreiniging beschermen.
- ▶ Geen veiligheidscomponent conform EU-machinerichtlijn.

### Gebruik volgens bestemming

De vork-fotocel WF is een opto-elektronische sensor, die met een zend- en ontvangsteenheid werkt. De sensor wordt gebruikt voor het optisch, contactloos registreren van objecten, etiketten en merken.

### Ingebruikneming

**1** L: helderschakelend, bij lichtontvangst schakelt uitgang (Q).
D: donkerschakelend, bij lichtonderbreking schakelt uitgang (Q).

**2** Connector spanningsloos monteren en vastschroeven. Voor de aansluiting in **B** geldt: brn=bruin, blu=blauw, blk=zwart, wht=wit.
Kabels aansluiten.

**3** Fotocel met bevestigingsgaten aan een geschikte houder monteren.
Sensor onder spanning zetten (z. typeplaatje); functieaanduiding moet branden volgens **3**.
Materiaalsnelheid gelijk aan nul (machine staat stil).
Afstellen lichtontvangst:
(toelichting beschrijft modus L: licht schakelend).

**3 A** Alleen XXB410:
Bij een optimale lichtontvangst licht de functieaanduiding (geel) permanent op. Als de aanduiding niet oplicht wordt geen of te weinig licht ontvangen: gevoeligheid met „+"-toets vergroten.
Controle objectregistratie:
Zet een object in de lichtbundel, de functieaanduiding (geel) moet uitgaan. Als de aanduiding niet uitgaat, dan moet de gevoeligheid m.b.v. de „–"-toets worden gereduceerd, tot de aanduiding uitgaat. Na het verwijderen van het object moet functieaanduiding (geel) opnieuw oplichten. Als dit niet het geval is, moet de gevoeligheid m.b.v. de „+"-toets worden gecorrigeerd, totdat de schakeldrempel correct is ingesteld.

**3 B** Alleen XXB416:
Eerste Teach-in-proces:
„+"- en „–"-toetsen gelijktijdig 1 s indrukken.
Functieaanduiding (rood) knippert.
Tweede Teach-in-proces:
„–"-toets 1 s indrukken.
Functieaanduiding (rood) gaat uit.
Als deze functieaanduiding (rood) knippert, dan Teach-in-proces herhalen.
Na beëindiging van het Teach-in-proces kan de schakeldrempel met de „+"- of „–"-toets afgesteld worden.

**3 C** Door gelijktijdig op de „+"- en „–"-toetsen te drukken (3 s) , kan het apparaat tegen onbedoeld gebruik worden afgesloten.

**3 D** Door gelijktijdig op de „+"- en „–"-toetsen te drukken (6 s), kan de helder/donkerschakeling worden insteld.

### Onderhoud

SICK-fotocellen zijn onderhoudsvrij. Wij bevelen aan, regelmatig
- de optische grensvlakken schoon te maken,
- schroef en langsverbindingen te controleren.

## ESPAÑOL

**Sensor de horquilla**
con luz infraroja
**Manual de Servicio**

### Observaciones sobre seguridad

- ▶ Leer el Manual de Servicio antes de la puesta en macrcha.
- ▶ Conexión, montaje y ajuste solo por personal técnico.
- ▶ A la puesta en marcha proteger el aparato contra humedad y suciedad.
- ▶ No es elemento constructivo de seguridad según la Directiva UE sobre maquinaria.

### Empleo para usos debidos

La barrera fotoeléctrica de horquilla WF es un sensor optoelectrónico que trabaja con una unidad de emisión y recepción. Esta barrera es empleada para la detección óptica sin contacto de objetos, etiquetas y marcas.

### Puesta en marcha

**1** L: conexión en claro, con recepción de luz conecta salida (Q).
D: conexión en oscuro, con interrupción de luz conecta salida (Q).

**2** Insertar y atornillar bien la caja de conexiones sin tensión.
Para conectar en **B**: brn=marrón, blu=azul, blk=negro, wht=blanco.
Conectar los conductores.

**3** Montar el sensor con los taladros de fijación en un soporte adecuado y ajustarlo de forma aproximada.
Conectar el sensor a la tensión de servicio (ver la placa de características); la indicación de funcionamiento debe encenderse conforme a **3**.
La velocidad del material es igual a cero (la máquina está parada). Ajuste de la recepción de luz:
(la explicación describe el modo L: conexión en claro).

**3 A** Sólo XXB410:
Con una recepción óptima de luz se enciende permanentemente la indicación de funcionamiento (amarilla). Si no se enciende, es que recibe muy poca luz. Aumentar la sensibilidad con la tecla "+".
Control de detección de objetos:
Colocar el objeto en la trayectoria de los rayos, la indicación de funcionamiento (amarilla) debe apagarse. Si no se apaga, reducir la sensibilidad con la tecla "–" hasta que se apague. Después de retirar el objeto debe encenderse de nuevo la indicación de funcionamiento (amarilla); de no ser así, corregir la sensibilidad con la tecla "+" hasta que el umbral de conmutación quede correctamente ajustado.

**3 B** Sólo XXB416:
Primer proceso de Teach-in:
Accionar simultáneamente las teclas "+" y "–" durante 1 s. La indicación de funcionamiento (roja) parpadea.
Segundo proceso de Teach-in:
Accionar la tecla "–" durante 1 s. La indicación de funcionamiento (roja) se apaga.
Si la indicación de funcionamiento (roja) parpadea, repetir el proceso de Teach-in.
Una vez concluido el proceso de Teach-in, podrá realizarse el ajuste del umbral de conmutación mediante la tecla "+" o "–".

**3 C** Pulsando simultáneamente las teclas "+" y "–" (3 s), puede bloquearse el aparato contra un accionamiento no intencionado.

**3 D** Pulsando simultáneamente las teclas "+" y "–" (6 s), puede ajustarse la conexión en claro/conexión en oscuro.

### Mantenimiento

Las barreras fotoeléctricas SICK están libres de mantenimiento.
Recomendamos a intérvalos regulares
- limpiar las superficies ópticas limítrofes,
- controlar los prensaestopas y las conexiones de enchufe.

## 汉语

叉形-光栅器
带有不可见的红外光
操作规程

- ▶ 使用前阅读操作规程.
- ▶ 只允许专业人员进行接线,安装及调整.
- ▶ 使用时应防潮湿防污染.
- ▶ 按照EU-机器规程无保护元件.

### 参量使用

叉形-光栅器WF是一个光电传感器,它是通过一个发射–接收部进行工作的,用于对物体、标签或商标进行无接触的光学识别.

### 投入使用

**1** L:亮时接通,即受光时输出端(Q)接通.
D:暗时接通,即光中断时输出端(Q)接通.

**2** (无电)插上电缆插座.
**B** 内的接头: brn= 黄色, blu= 蓝色, blk= 黑色, wht= 白色.
线路连接.

**3** 将带有紧固孔的传感器安装在适宜的支架上,并粗装.
将传感器与工作电源连接
(参考型号标签); 运行指示灯应亮
(如**3**)。
物质速为零时(机器停止运行)。调节受光: (说明中的运行方式L: 亮时接通)

**3 A** 只XXB410:
受光理想时,运行信号(黄)应恒亮,如不亮,说明受光太少: 用"+"键增加灵敏度。
摄物检测
将物件置于光路后运行信号(黄色)应不亮。如果仍亮,需将敏感度通过"–"键减小,直到黄色信号消失。
取走物件后,运行信号(黄灯)应再次亮起,如果不亮,需通过"+"键校对,直到开关阈值被准确设定。

**3 B** 只XXB416:
第一个Teach-in过程:
同时按住"+"、"–"两键1秒,运行信号(红色)将闪亮。
第二个Teach-in过程:
按住"–"键1秒。
运行信号(红色)将消失。如果信号闪亮,需重复Teach-in。
Teach-in过程结束后,可通过"+"键或"–"键微调开关阈。

**3 C** 通过同时按下"+"和"–"键(3秒),仪器可以预防过失触键操作。

**3 D** 通过同时按下"+"和"–"键(6秒),亮时接通/暗时接通可被设定。

### 维护

SICK-光电器全部免维护.我们建议,
- 定期地清洁光学反光面,
- 检查螺丝拧紧和插头.

system

**ASSEMBLY TITLE:** **FRAME ASSEMBLY**

## GENERAL FUNCTION:

- Provides solid mounting for labeling head if not installed on a system that allows for vertical and horizontal adjustment.
- Allows for vertical and horizontal adjustment in the setup of the labeling head operation.

## SET-UP AND ADJUSTMENTS:

- Rotate leveling pads to appropriate position. Secure locknut when proper height is achieved.
- Using ratchet handle, adjust labeling head vertical and horizontal position.

## MAINTENANCE:

- Clean wipe down rails with clean cloth.

| ITEM | QTY | PART NO. | DESCRIPTION | PARENT ITEM |
|---|---|---|---|---|
| 1 | 4 | 729006-000 | CAP INSERT FOR 2 X 4 TUBE | 22529-034S_7 |
| 2 | 4 | 791436-000 | CAP, 3/4" HIGH X 5/8" I.D. | 22529-034S_7 |
| 3 | 4 | 791449-000 | SWIVEL CASTER | 22529-034S_7 |
| 4 | 4 | 793020-000 | LEVELING MOUNT | 22529-034S_7 |
| 5 | 4 | B22787-000 | CONVEYOR RISER | 22529-034S_7 |
| 6 | 1 | D24424-034S_7 | WELDED FRAME ASSEMBLY | 22529-034S_7 |
| 7 | 2 | D24425-000 | WIRE COVER | 22529-034S_7 |

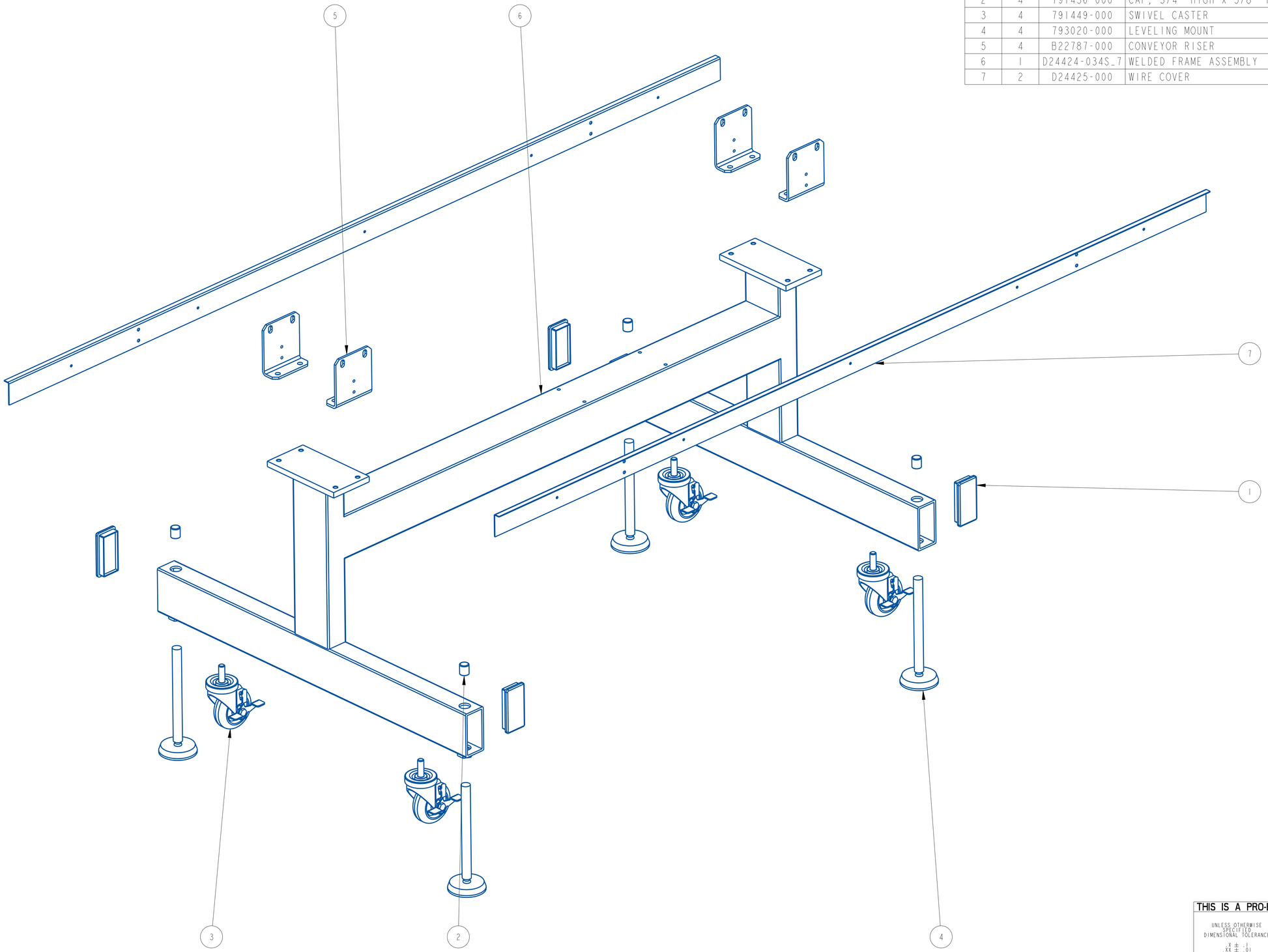


| REV | DATE | DESCRIPTION | BY |
|---|---|---|---|
| A | 08/26/24 | NEW DRAWING | TAZ |

THIS IS A PRO-ENGINEER DOCUMENT AND MAY NOT BE MODIFIED MANUALLY

UNLESS OTHERWISE SPECIFIED
DIMENSIONAL TOLERANCE
X ± .1
XX ± .01
XXX ± .005
ANGLES ± 30°
SURFACE FINISH 125
BREAK ALL EDGES .005/.015
CORNER RADIUS .010/.030
ALL ANGLES ARE 90°

QUADREL LABELING SYSTEMS
7670 JENTHER DRIVE
MENTOR, OHIO 44060
(440) 602-4700

SCALE: 1/4
DATE: 08/26/24
DRW BY: TAZ
CHK BY:08/26/2024-SEM
APPR BY:

OPEN LINE FRAME,7-1/2" x 34"

MAT'L

22529-034S_7

SHEET 1 OF 2

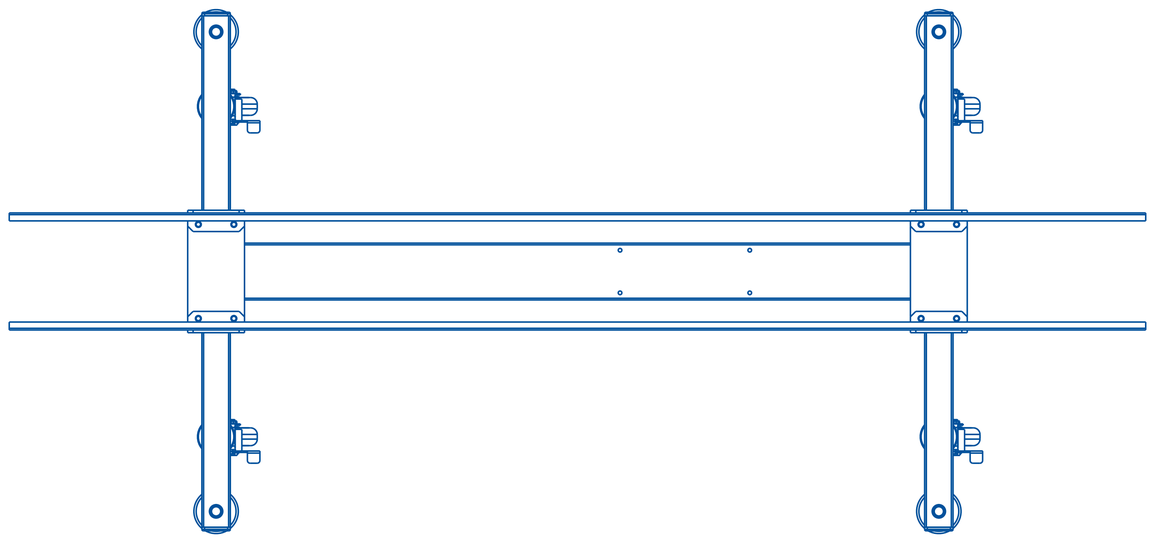

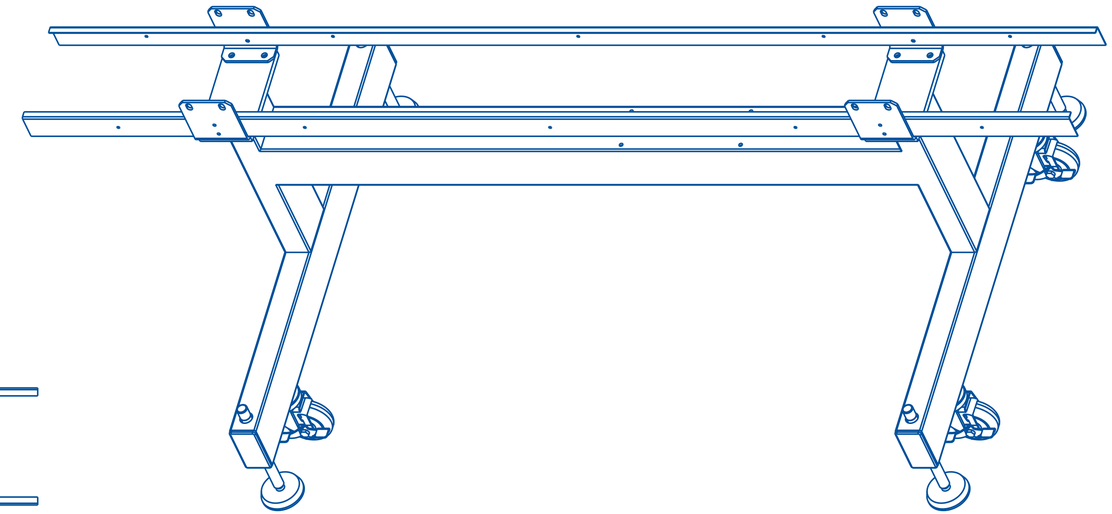

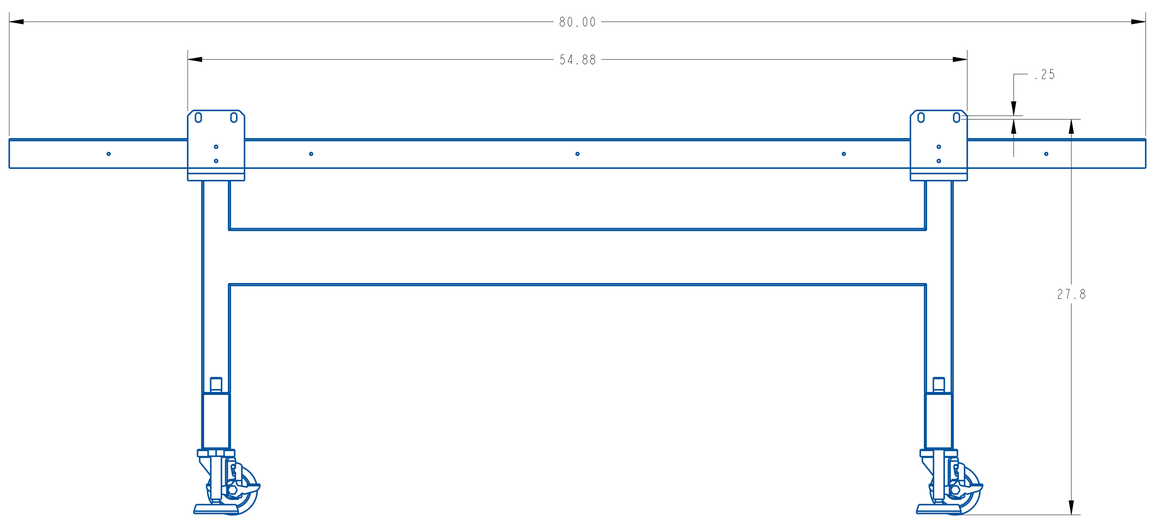


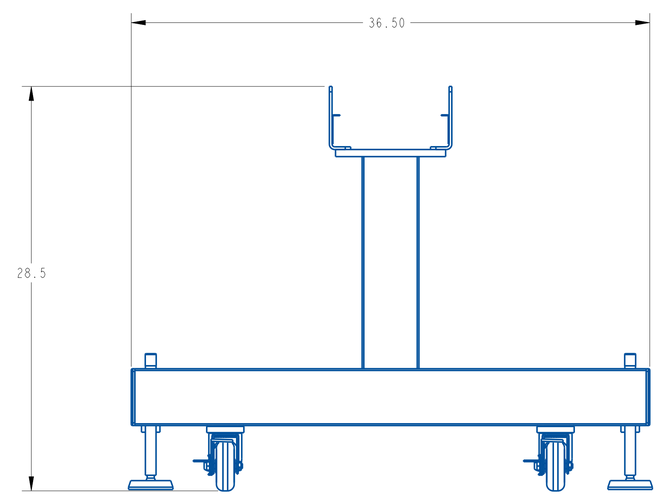


| REV | DATE | DESCRIPTION | BE |
|---|---|---|---|
| A | 08/26/24 | NEW DRAWING | TAZ |

THIS IS A PRO-ENGINEER DOCUMENT AND MAY NOT BE MODIFIED MANUALLY

UNLESS OTHERWISE SPECIFIED
DIMENSIONAL TOLERANCE
X ± .1
XX ± .01
XXX ± .005
ANGLES ± 30'
SURFACE FINISH 125
BREAK ALL EDGES .005/.015
CORNER RADIUS .010/.030
ALL ANGLES ARE 90°

QUADREL LABELING SYSTEMS
7670 JENTHER DRIVE
MENTOR, OHIO 44060
(440) 602-4700

SCALE: 3/16
DATE: 08/26/24
DRW BY: TAZ
CHK BY: 08/26/2024-SEM
APPR BY:

OPEN LINE FRAME, 7-1/2" x 34"

MAT'L

22529-034S_7

SHEET 2 OF 2

| ITEM | QTY | PART NO. | DESCRIPTION | PARENT ITEM |
|---|---|---|---|---|
| 1 | 1 | 729006-000 | CAP INSERT FOR 2 X 4 TUBE | 22615-006 |
| 2 | 1 | 791449-000 | SWIVEL CASTER | 22615-006 |
| 3 | 1 | A24366-000 | MODIFIED LEVELING MOUNT | 22615-006 |
| 4 | 1 | D25140-006 | SUPPORT LEG | 22615-006 |

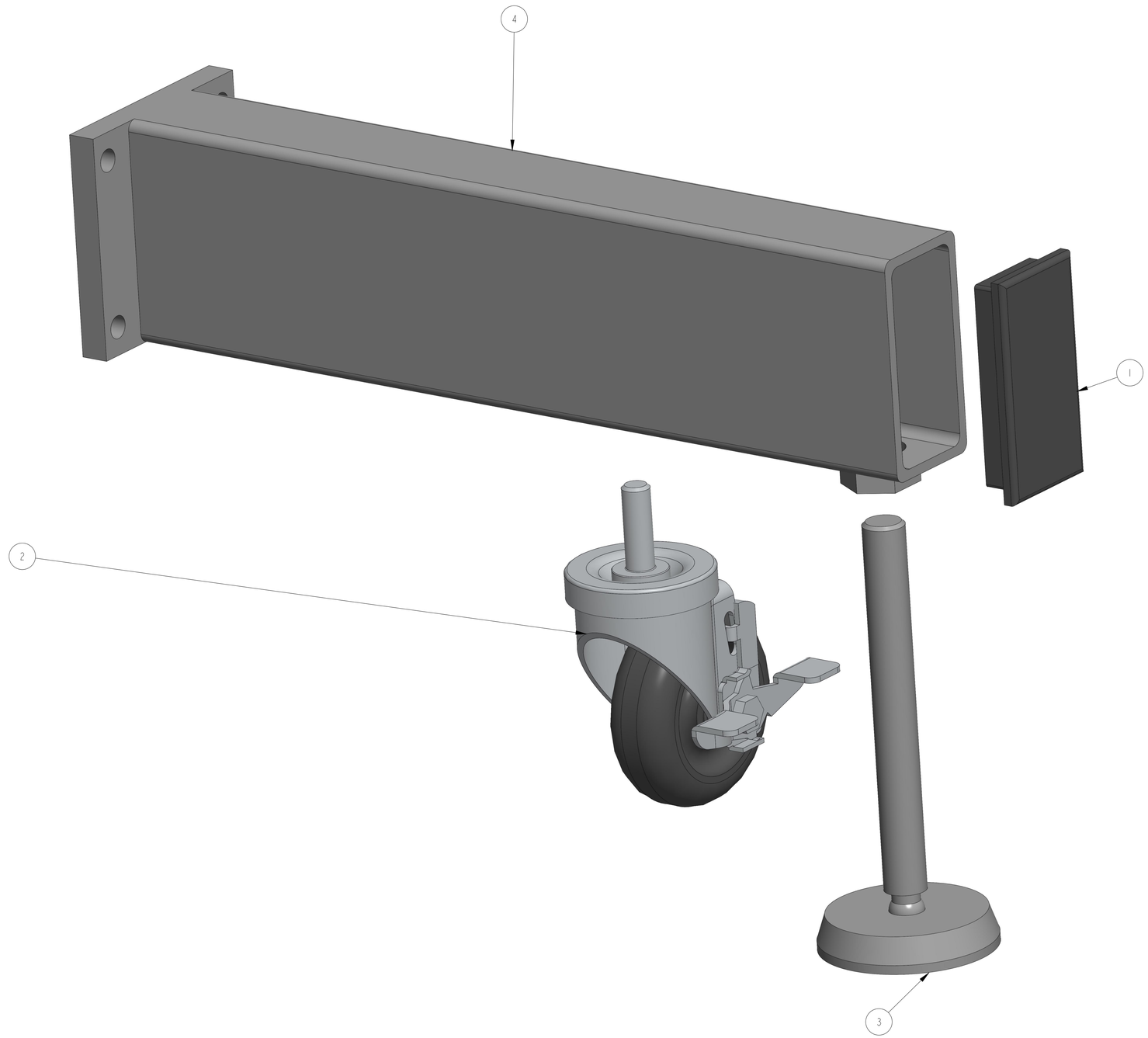


| REV | DATE | DESCRIPTION | BY |
|---|---|---|---|
| A | Aug-19-22 | NEW DRAWING | TJS |

THIS IS A PRO-ENGINEER DOCUMENT AND MAY NOT BE MODIFIED MANUALLY

UNLESS OTHERWISE SPECIFIED
DIMENSIONAL TOLERANCE
.X ± .1
.XX ± .01
.XXX ± .005
ANGLES ± 30'

SURFACE FINISH 125
BREAK ALL EDGES .005/.015
CORNER RADIUS .010/.030


QUADREL LABELING SYSTEMS
7670 JENTHER DRIVE
MENTOR, OHIO 44060
(440) 602-4700


| | |
|---|---|
| SCALE | 1/1 |
| DATE | Aug-19-22 |
| DRAWN BY | TJS |

ELECTRICAL BOX SUPPORT LEG

MAT'L 22615-006

22615-006

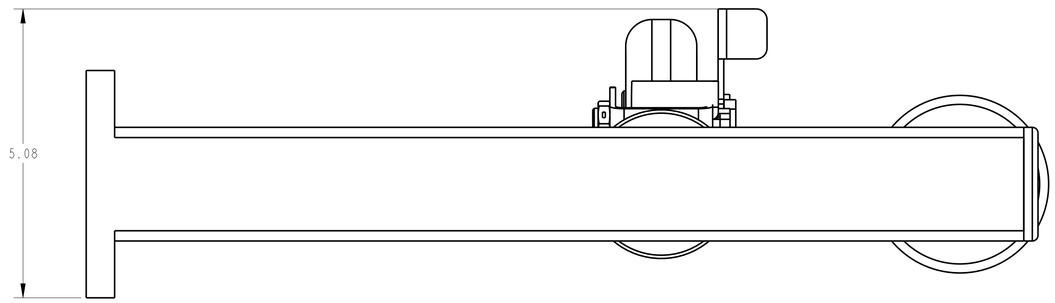


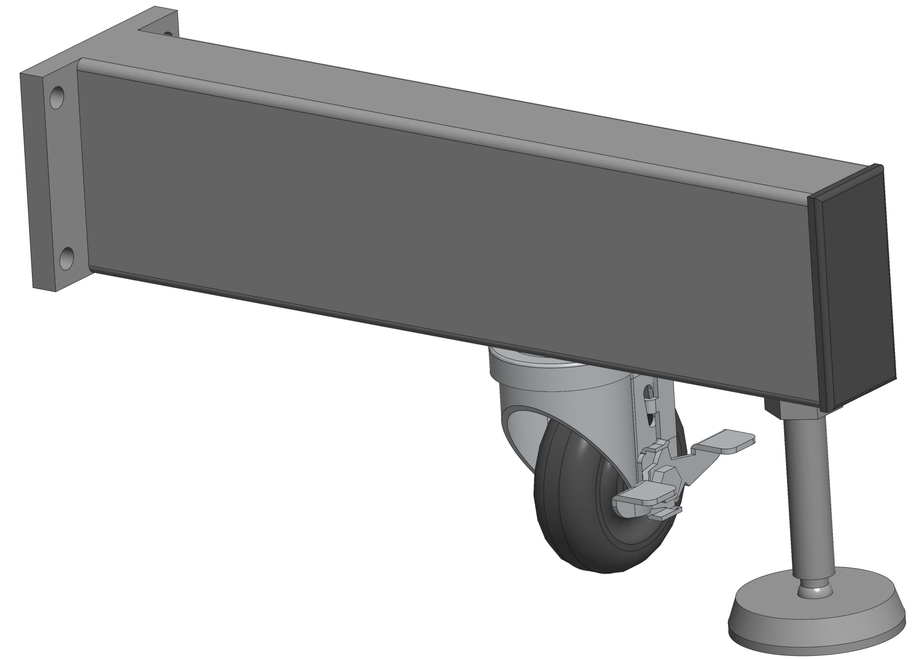

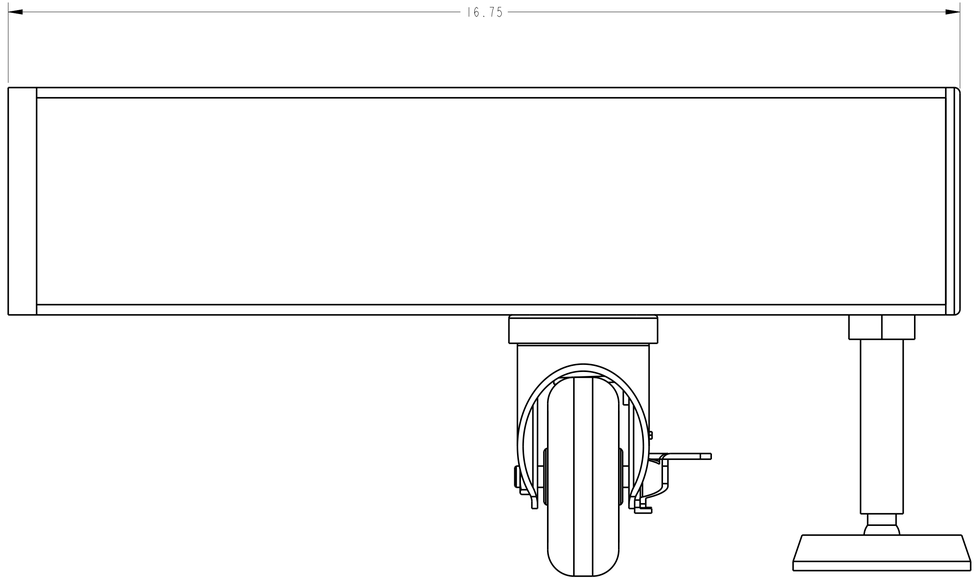


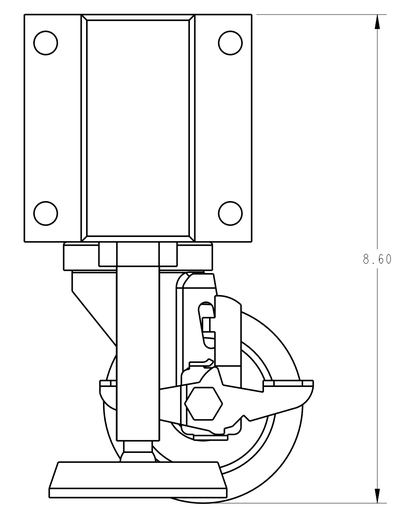


| REV | DATE | DESCRIPTION | BY |
|---|---|---|---|
| A | Aug-19-22 | NEW DRAWING | TJS |

THIS IS A PRO-ENGINEER DOCUMENT AND MAY NOT BE MODIFIED MANUALLY

UNLESS OTHERWISE SPECIFIED
DIMENSIONAL TOLERANCE
.X ± .1
.XX ± .01
.XXX ± .005
ANGLES ± 30'

SURFACE FINISH 125
BREAK ALL EDGES .005/.015
CORNER RADIUS .010/.030

QUADREL LABELING SYSTEMS
7670 JENTHER DRIVE
MENTOR, OHIO 44060
(440) 602-4700

| | |
|---|---|
| SCALE | 3/4 |
| DATE | Aug-19-22 |
| DRAWN BY | TJS |

ELECTRICAL BOX SUPPORT LEG

MAT'L 22615-006

22615-006

SHEET 2 OF 2

**ASSEMBLY TITLE:** **NON-INTEGRATED CONVEYOR**

## GENERAL FUNCTION:

- To transfer the product to the labeling heads at a predetermined speed.
- To provide retention for the head support and guide rails.

## SET-UP AND ADJUSTMENTS:

- Adjust conveyor to proper working height by rotating leveling pads to appropriate position. Secure locknut when proper height is achieved.
- Using ratchet handles, adjust guide rails to the product.
- Adjust conveyor speed by means of conveyor speed potentiometer (if applicable) located in the remote electronics enclosure mounted to the conveyor, or through the operator's touchscreen if provided.

## MAINTENANCE:

- The conveyor drive chain must be greased with white lithium grease.
- Do not allow chain and sprockets to run dry, lubricate periodically.
- The gear motor gearbox should be checked quarterly and filled with Synthetic based Tivela Oil SC320 or an ISO320 Gear Lube lubricant.
- Grease flange bearings often to prevent them from running dry.

## TROUBLESHOOTING:

| PROBLEM | WHAT TO DO |
|---|---|
| - Excessive Noise | - Realign sprocket.<br>- Check if chain and sprockets are lubricated. If dry, lubricate as discussed above. |
| - Chain too loose | - Slide gear motor downward to create more tension on chain. |
| - Uneven wear on sprockets. | - Realign sprockets. |
| - Shaft not running concentric | - Replace flange bearing. |

| ITEM | QTY | PART NO. | DESCRIPTION | PARENT ITEM |
|---|---|---|---|---|
| 1 | 1 | 171033-001 | BEARING | 22575-520 |
| 2 | 1 | 192571-000_A | TIMING BELT | 22575-520 |
| 3 | 1 | 202123-000 | CUBE ENCODER, 1200PPM, 3/8 DIA | 22575-520 |
| 4 | 1 | 342018-000 | IDLER WHEEL | 22575-520 |
| 5 | 1 | 342019-002 | DRIVE SPROCKET, MODULINE | 22575-520 |
| 6 | 1 | 351166-000 | TIMING PULLEY | 22575-520 |
| 7 | 1 | 361088-002_20 | TABLE TOP CHAIN | 22575-520 |
| 8 | 1 | 413016-000 | GEARMOTOR-3/8HP-57 RPM 3PHASE | 22575-520 |
| 9 | 32 | 791873-000 | SPACER | 22575-520 |
| 10 | 2 | 792322-000_108 | WEAR STRIP, FLAT BAR CLIP-ON | 22575-520 |
| 11 | 1 | 792361-000L-93 | WEAR STRIP, FLAT BAR CLIP-ON (6ft) | 22575-520 |
| 12 | 1 | 792361-000R-93 | WEAR STRIP, FLAT BAR CLIP-ON (6ft) | 22575-520 |
| 13 | 1 | A23098-107 | CONVEYOR IDLER SHAFT | 22575-520 |
| 14 | 2 | A23099_002 | CHAIN BELT GUIDE | 22575-520 |
| 15 | 1 | A25119-500 | DRIVE SHAFT PULLEY | 22575-520 |
| 16 | 1 | A25127-000 | ENCODER COVER PLATE | 22575-520 |
| 17 | 1 | B20237-507 | CONVEYOR DRIVE SHAFT | 22575-520 |
| 18 | 1 | D24421-1020_7 | CONVEYOR SIDE WALL | 22575-520 |
| 19 | 1 | D24421-1021_7 | CONVEYOR SIDE WALL | 22575-520 |

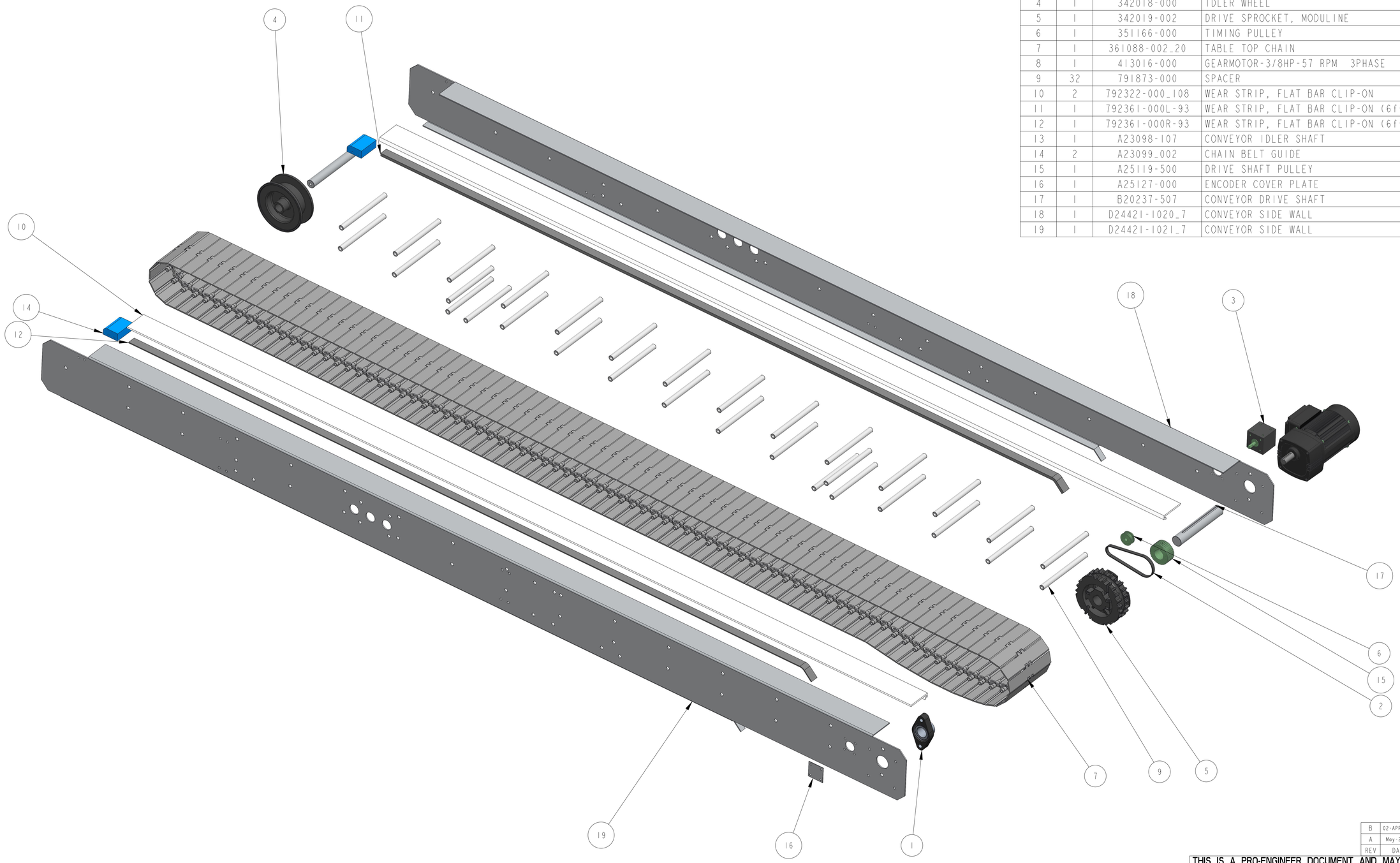


| REV | DATE | DESCRIPTION | BY |
|---|---|---|---|
| B | 02-APR-2024 | UPDATED DRAWING AND BOM | CRT |
| A | May-24-21 | NEW DRAWING | TJS |

THIS IS A PRO-ENGINEER DOCUMENT AND MAY NOT BE MODIFIED MANUALLY

UNLESS OTHERWISE SPECIFIED
DIMENSIONAL TOLERANCE
.X ± .1
.XX ± .01
.XXX ± .005
ANGLES ± 30°

SURFACE FINISH 125
BREAK ALL EDGES .005/.015
CORNER RADIUS .010/.030


QUADREL LABELING SYSTEMS
7670 JENTHER DRIVE
MENTOR, OHIO 44060
(440) 602-4700


SCALE: 3/16
DATE: May-24-21
DRW BY: TJS
CHK BY: 05/29/2024-SEM
APPR BY:

7.5" WIDE CONVEYOR ASSEMBLY

MAT'L

22575-520

SHEET 1 OF 2

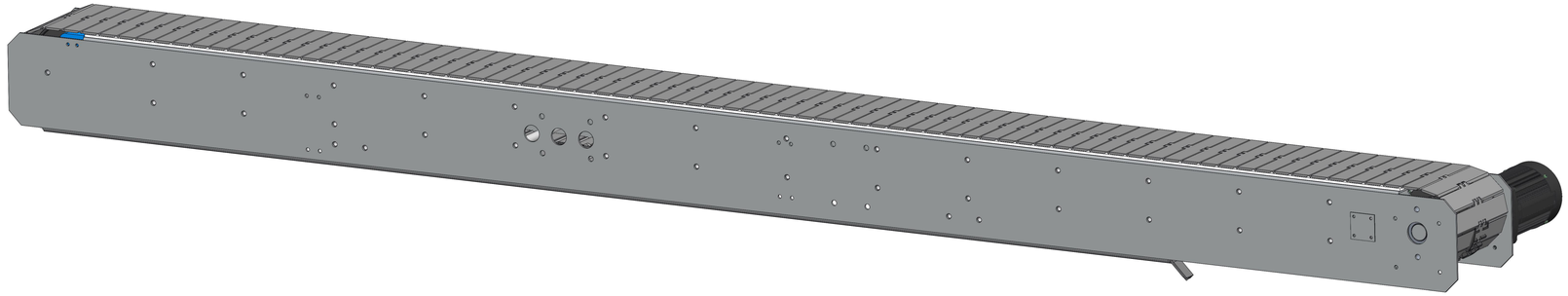

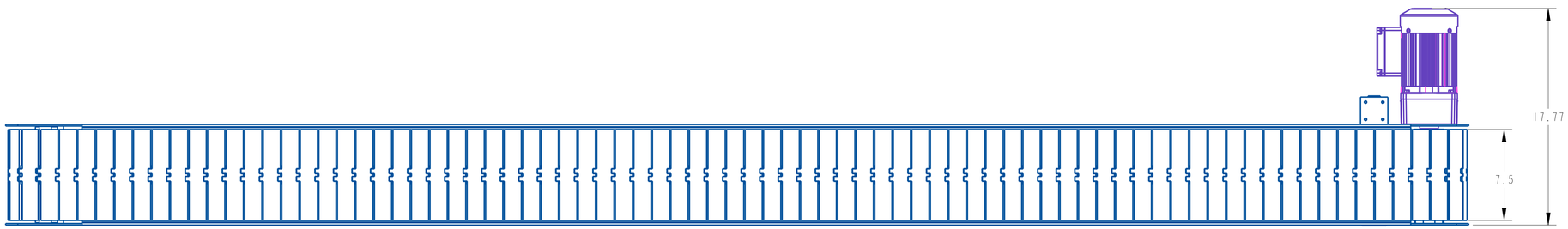


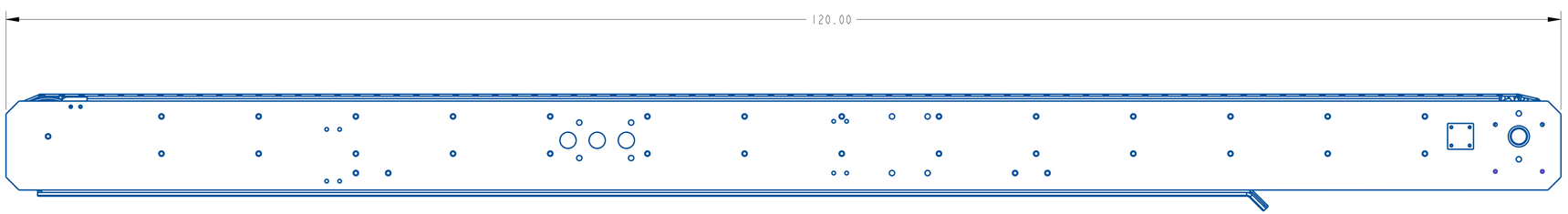


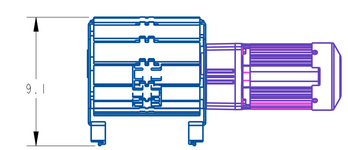


| REV | DATE | DESCRIPTION | BY |
|---|---|---|---|
| B | 02-APR-2024 | UPDATED DRAWING AND BOM | CRT |
| A | May-24-21 | NEW DRAWING | TJS |

THIS IS A PRO-ENGINEER DOCUMENT AND MAY NOT BE MODIFIED MANUALLY

UNLESS OTHERWISE SPECIFIED
DIMENSIONAL TOLERANCE
.X ± .1
.XX ± .01
.XXX ± .005
ANGLES ± 30'

SURFACE FINISH 125
BREAK ALL EDGES .005/.015
CORNER RADIUS .010/.030
ALL ANGLES ARE 90°

QUADREL LABELING SYSTEMS
7670 JENTHER DRIVE
MENTOR, OHIO 44060
(440) 602-4700

| | |
|---|---|
| SCALE: | 3/16 |
| DATE: | May-24-21 |
| DRW BY: | TJS |
| CHK BY: | 05/29/2024-SEM |
| APPR BY: | |

7.5" WIDE CONVEYOR ASSEMBLY

MAT'L

22575-520

SHEET 2 OF 2

| ITEM | QTY | PART NO. | DESCRIPTION | PARENT ITEM |
|---|---|---|---|---|
| 1 | 1 | 791732-000 | CLAMP FOR CONICAL SIDE GUIDE | 22435-034 |
| 2 | 1 | 791914-002_06 | MYLAR SCALE, QUADREL LOGO | 22435-034 |
| 3 | 1 | 791914-003_06 | MYLAR SCALE, QUADREL LOGO, 6" LG. | 22435-034 |
| 4 | 1 | 792711-000 | CAP, ORANGE | 22435-034 |
| 5 | 2 | 801308-000 | KNOB W/ 1/4-20 STUD | 22435-034 |
| 6 | 1 | A20875-000 | RETAINER BLOCK, CONV. RAIL | 22435-034 |
| 7 | 1 | A20876-000 | RETAINER BLOCK | 22435-034 |
| 8 | 1 | A21198-199 | ADJUSTMENT ROD | 22435-034 |
| 9 | 1 | A28000-000 | CLAMPING ROD ASSEMBLY 6" | 22435-034 |

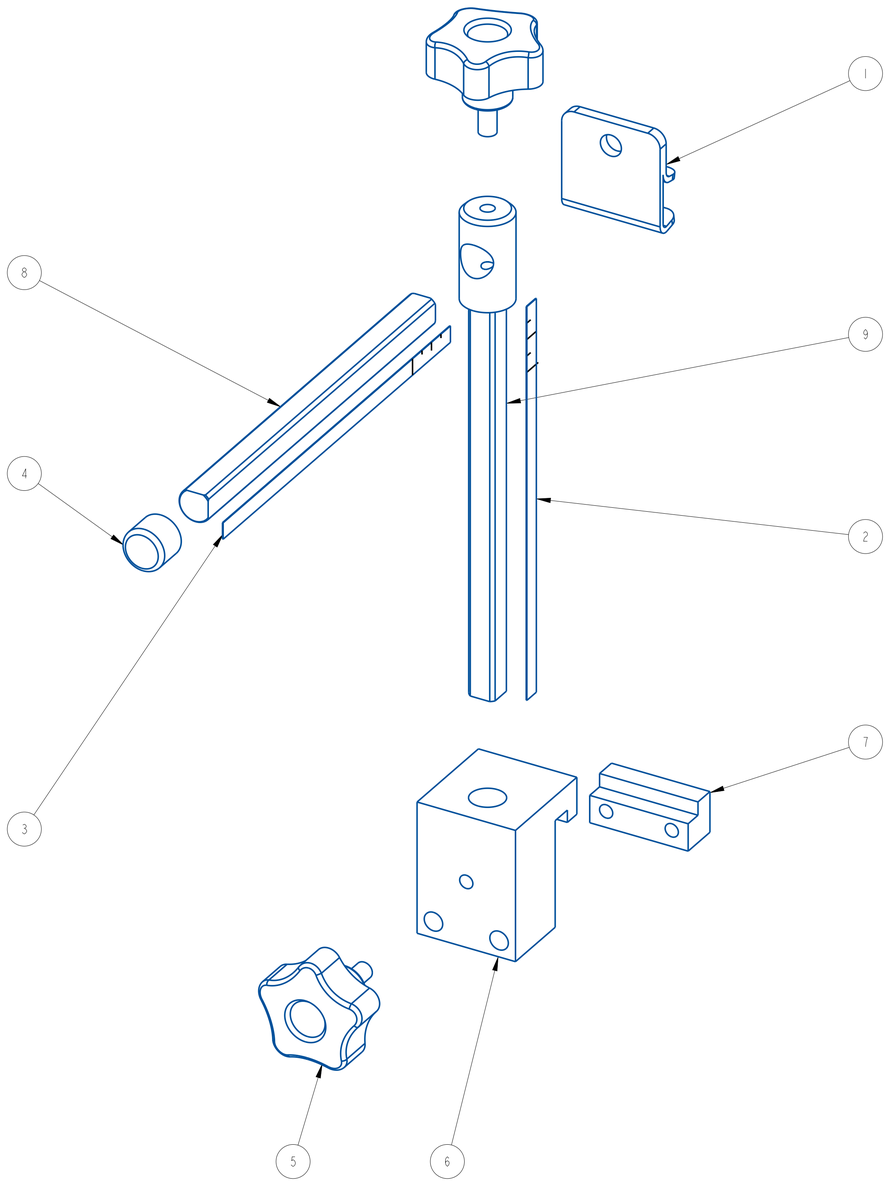


| REV | DATE | DESCRIPTION | BY |
|---|---|---|---|
| A | Aug-07-25 | NEW DRAWING | TAZ |

THIS IS A PRO-ENGINEER DOCUMENT AND MAY NOT BE MODIFIED MANUALLY

UNLESS OTHERWISE SPECIFIED
DIMENSIONAL TOLERANCE
.X ± .1
.XX ± .01
.XXX ± .005
ANGLES ± 30°

SURFACE FINISH 125
BREAK ALL EDGES .005/.015
CORNER RADIUS .010/.030
ALL ANGLES ARE 90°

QUADREL LABELING SYSTEMS
7670 JENTHER DRIVE
MENTOR, OHIO 44060
(440) 602-4700

SCALE: 1/1
DATE: Aug-07-25
DRW BY: TAZ
CHK BY:08/28/2025-SEM
APPR BY:

RAIL KIT WITH SCALES

MAT'L

22435-034

SHEET 1 OF 2

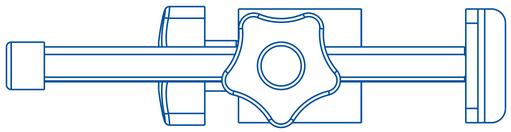

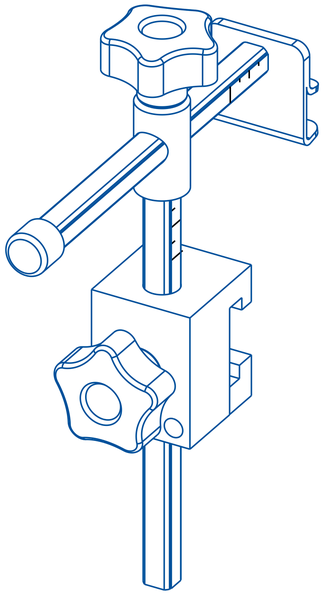

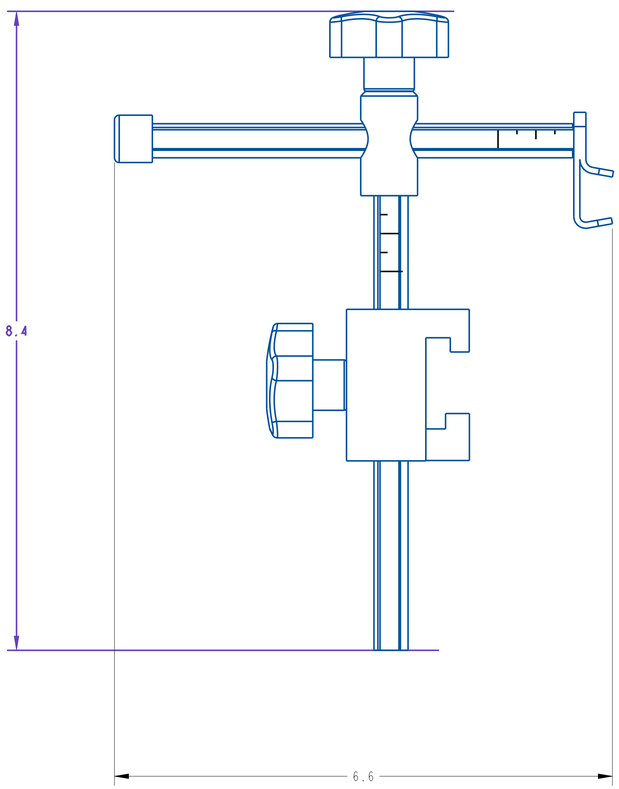


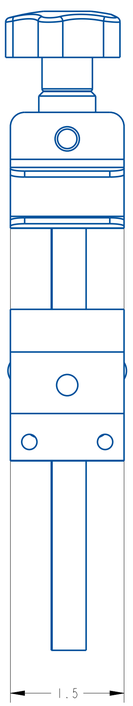


| REV | DATE | DESCRIPTION | BY |
|---|---|---|---|
| A | Aug-07-25 | NEW DRAWING | TAZ |

THIS IS A PRO-ENGINEER DOCUMENT AND MAY NOT BE MODIFIED MANUALLY

UNLESS OTHERWISE SPECIFIED
DIMENSIONAL TOLERANCE
.X ± .1
.XX ± .01
.XXX ± .005
ANGLES ± 30'

SURFACE FINISH 125
BREAK ALL EDGES .005/.015
CORNER RADIUS .010/.030
ALL ANGLES ARE 90°

QUADREL LABELING SYSTEMS
7670 JENTHER DRIVE
MENTOR, OHIO 44060
(440) 602-4700

SCALE: 1/1
DATE: Aug-07-25
DRW BY: TAZ
CHK BY:08/28/2025-SEM
APPR BY:

RAIL KIT WITH SCALES

MAT'L

22435-034

SHEET 2 OF 2

| ITEM | QTY | PART NO. | DESCRIPTION | PARENT ITEM |
|---|---|---|---|---|
| 1 | 2 | 792185-001 | TRANSFER ROLLERS | 22836-000 |
| 2 | 2 | 792190-000 | TRANSFER ROLLERS | 22836-000 |
| 3 | 1 | B21924-004 | TRANSFER ROLLER MOUNTING PLATE | 22836-000 |
| 4 | 1 | B21925-007 | TRANSFER SUPPORT PLATE | 22836-000 |
| 5 | 1 | B21926-003 | TRANSFER CONNECTING PLATE | 22836-000 |

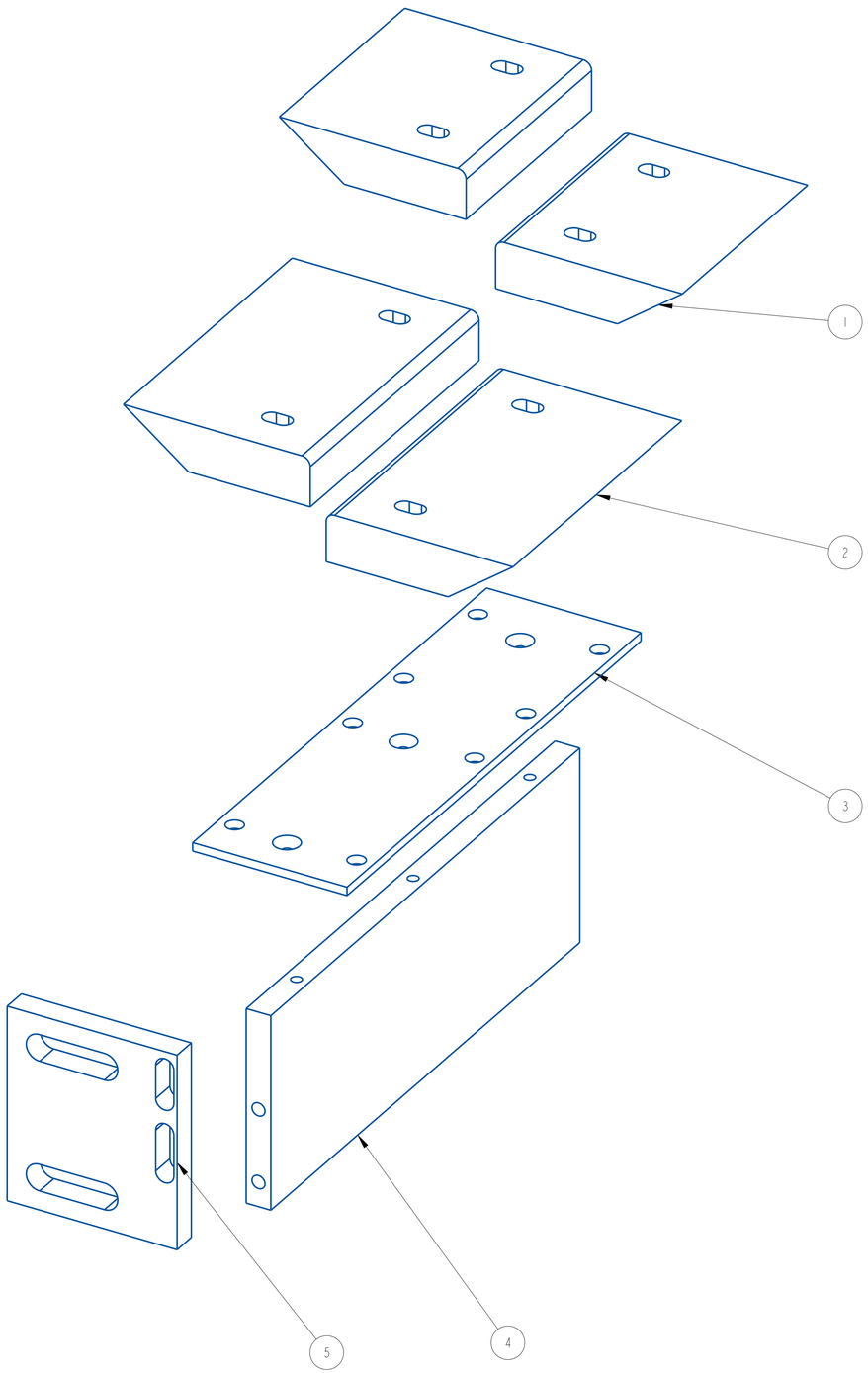


| REV | DATE | DESCRIPTION | BY |
|---|---|---|---|
| A | 27-MAR-2024 | NEW DRAWING | CRT |

THIS IS A PRO-ENGINEER DOCUMENT AND MAY NOT BE MODIFIED MANUALLY

UNLESS OTHERWISE SPECIFIED
DIMENSIONAL TOLERANCE
.X ± .1
.XX ± .01
.XXX ± .005
ANGLES ± 30'

SURFACE FINISH 125
BREAK ALL EDGES .005/.015
CORNER RADIUS .010/.030
ALL ANGLES ARE 90°

QUADREL LABELING SYSTEMS
7670 JENTHER DRIVE
MENTOR, OHIO 44060
(440) 602-4700

SCALE: 1/1
DATE: 27-MAR-2024
DRW BY: CRT
CHK BY:05/17/2024-SEM
APPR BY:

7 1/2" CONV. ROLLER TRANSFER

MAT'L

22836-000

SHEET 1 OF 2

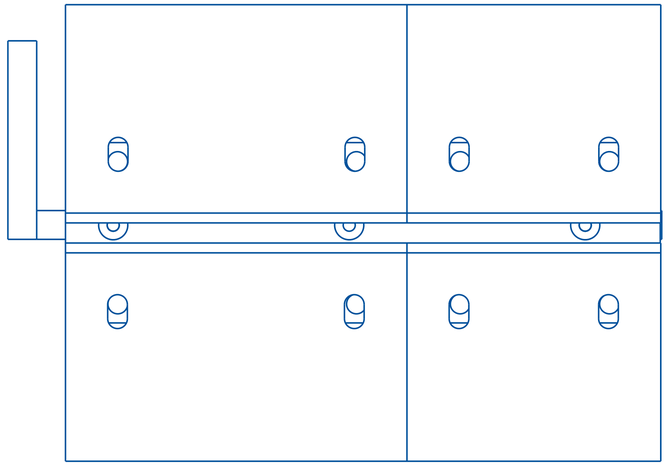

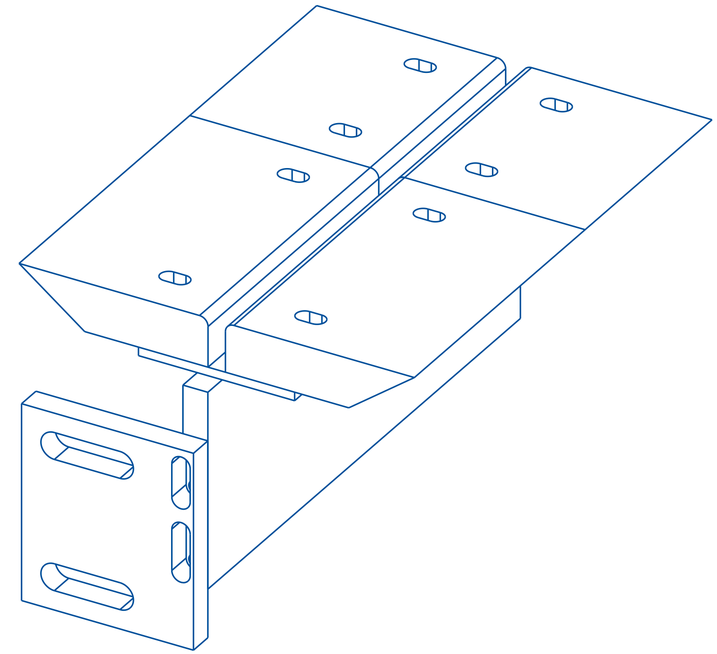

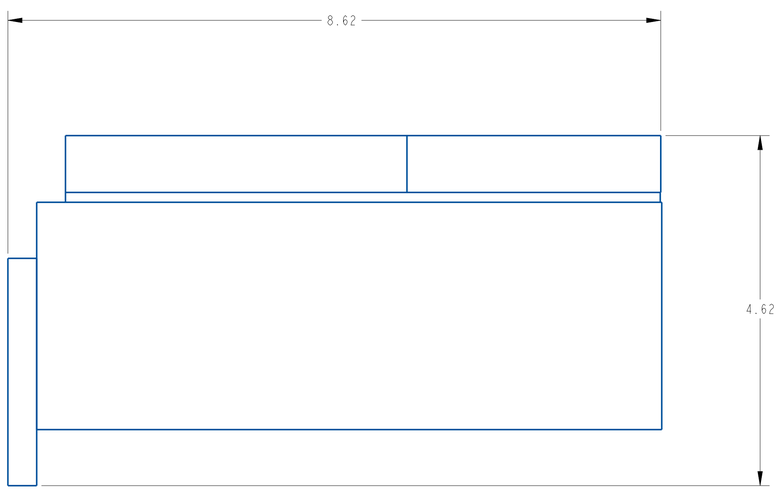


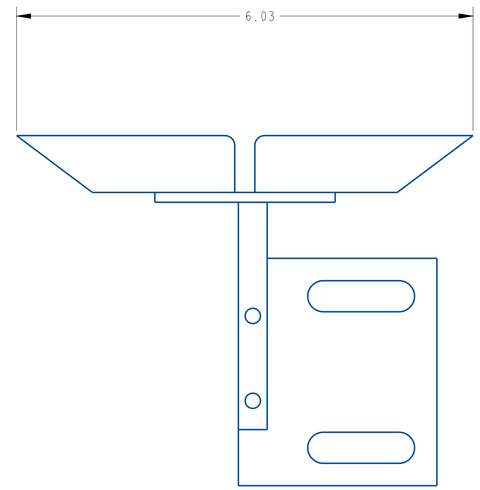


| REV | DATE | DESCRIPTION | BYE |
|---|---|---|---|
| A | 27-MAR-2024 | NEW DRAWING | CRT |

THIS IS A PRO-ENGINEER DOCUMENT AND MAY NOT BE MODIFIED MANUALLY

UNLESS OTHERWISE SPECIFIED
DIMENSIONAL TOLERANCE
X ± .1
XX ± .01
XXX ± .005
ANGLES ± 30'

SURFACE FINISH 125
BREAK ALL EDGES .005/.015
CORNER RADIUS .010/.030
ALL ANGLES ARE 90°

QUADREL LABELING SYSTEMS
7670 JENTHER DRIVE
MENTOR, OHIO 44060
(440) 602-4700

SCALE: 1/1
DATE: 27-MAR-2024
DRW BY: CRT
CHK BY:05/17/2024-SEM
APPR BY:

7 1/2" CONV. ROLLER TRANSFER

MAT'L

22836-000

SHEET 2 OF 2

| ITEM | QTY | PART NO. | DESCRIPTION | PARENT ITEM |
|---|---|---|---|---|
| 1 | 2 | 792711-000 | CAP, ORANGE | 21649-001 |
| 2 | 2 | A20875-000 | RETAINER BLOCK, CONV. RAIL | 21649-001 |
| 3 | 2 | A20876-000 | RETAINER BLOCK | 21649-001 |
| 4 | 2 | A21198-199 | ADJUSTMENT ROD | 21649-001 |
| 5 | 1 | B21525-004 | TRANSFER PLATE | 21649-001 |

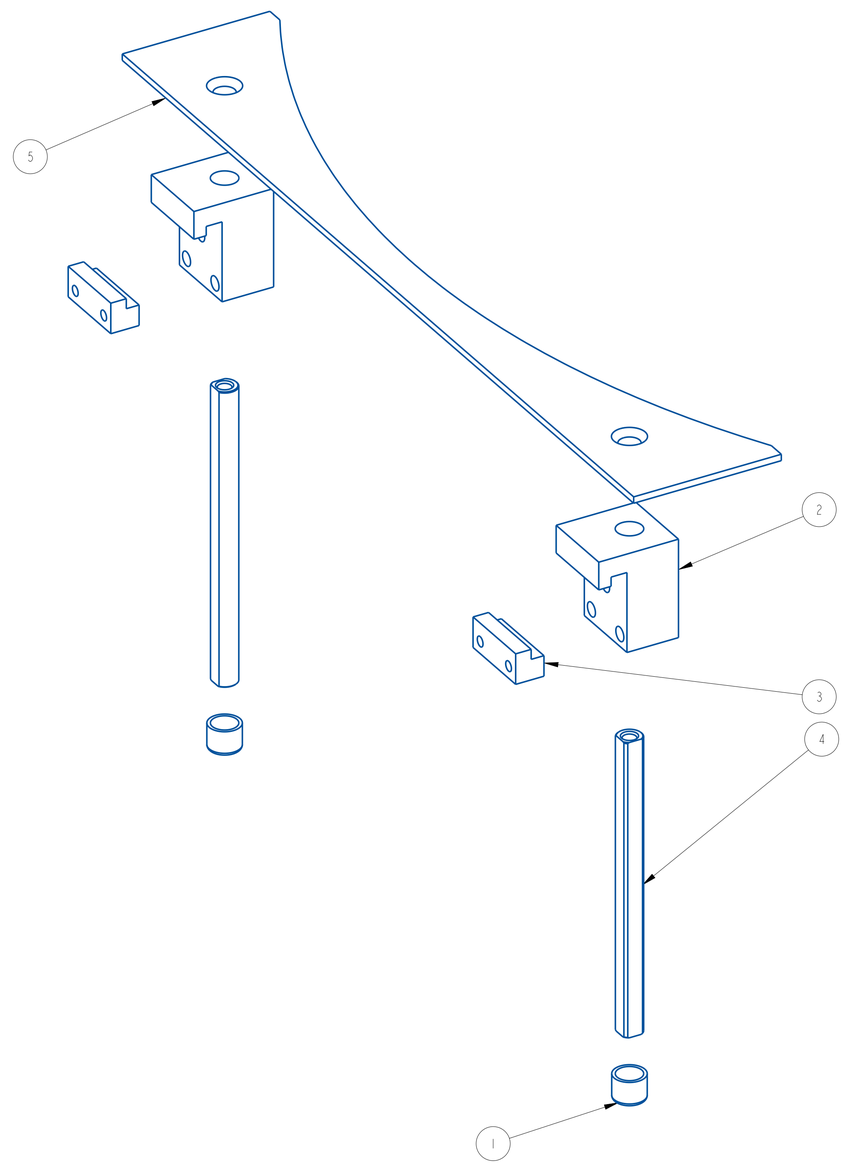


| REV | DATE | DESCRIPTION | BY |
|---|---|---|---|
| A | Dec-02-25 | NEW DRAWING | RDL |

THIS IS A PRO-ENGINEER DOCUMENT AND MAY NOT BE MODIFIED MANUALLY

UNLESS OTHERWISE SPECIFIED
DIMENSIONAL TOLERANCE
X ± .1
XX ± .01
XXX ± .005
ANGLES ± 30°
SURFACE FINISH 125
BREAK ALL EDGES .005/.015
CORNER RADIUS .010/.030
ALL ANGLES ARE 90°

QUADREL LABELING SYSTEMS
7670 JENTHER DRIVE
MENTOR, OHIO 44060
(440) 602-4700

SCALE: 3/4
DATE: Dec-02-25
DRW BY: RDL
CHK BY:
APPR BY:

TRANSFER PLATE

MAT'L

21649-001

SHEET 1 OF 2

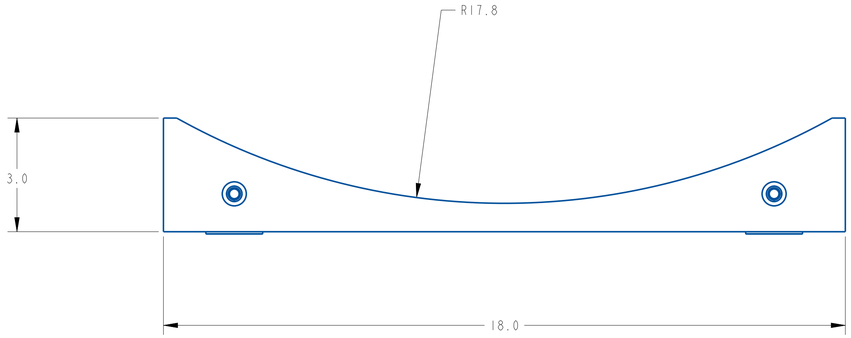


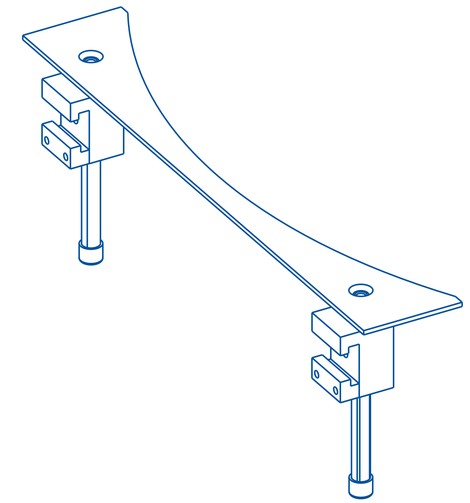

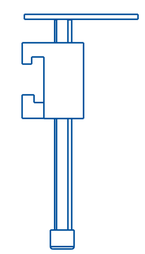

| REV | DATE | DESCRIPTION | BY |
|---|---|---|---|
| A | Dec-02-25 | NEW DRAWING | RDL |

THIS IS A PRO-ENGINEER DOCUMENT AND MAY NOT BE MODIFIED MANUALLY

UNLESS OTHERWISE SPECIFIED
DIMENSIONAL TOLERANCE
X ± .1
XX ± .01
XXX ± .005
ANGLES ± 30'

SURFACE FINISH 125
BREAK ALL EDGES .005/.015
CORNER RADIUS .010/.030
ALL ANGLES ARE 90°

QUADREL LABELING SYSTEMS
7670 JENTHER DRIVE
MENTOR, OHIO 44060
(440) 602-4700

SCALE: 1/2
DATE: Dec-02-25
DRW BY: RDL
CHK BY:
APPR BY:

TRANSFER PLATE

MAT'L

21649-001

SHEET 2 OF 2

| ITEM | QTY | PART NO. | DESCRIPTION | PARENT ITEM |
|---|---|---|---|---|
| 1 | 1 | 221152-005 | ENCLOSURE, E-STOP W/ BUTTON | 20789-000 |
| 2 | 1 | 241780-000 | STRAIN RELIEF, CABLE | 20789-000 |
| 3 | 1 | 241780-001 | STRAIN RELIEF, CABLE PANEL | 20789-000 |
| 4 | 1 | A25719-000 | CYLINDER MOUNTING ANGLE | 20789-000 |

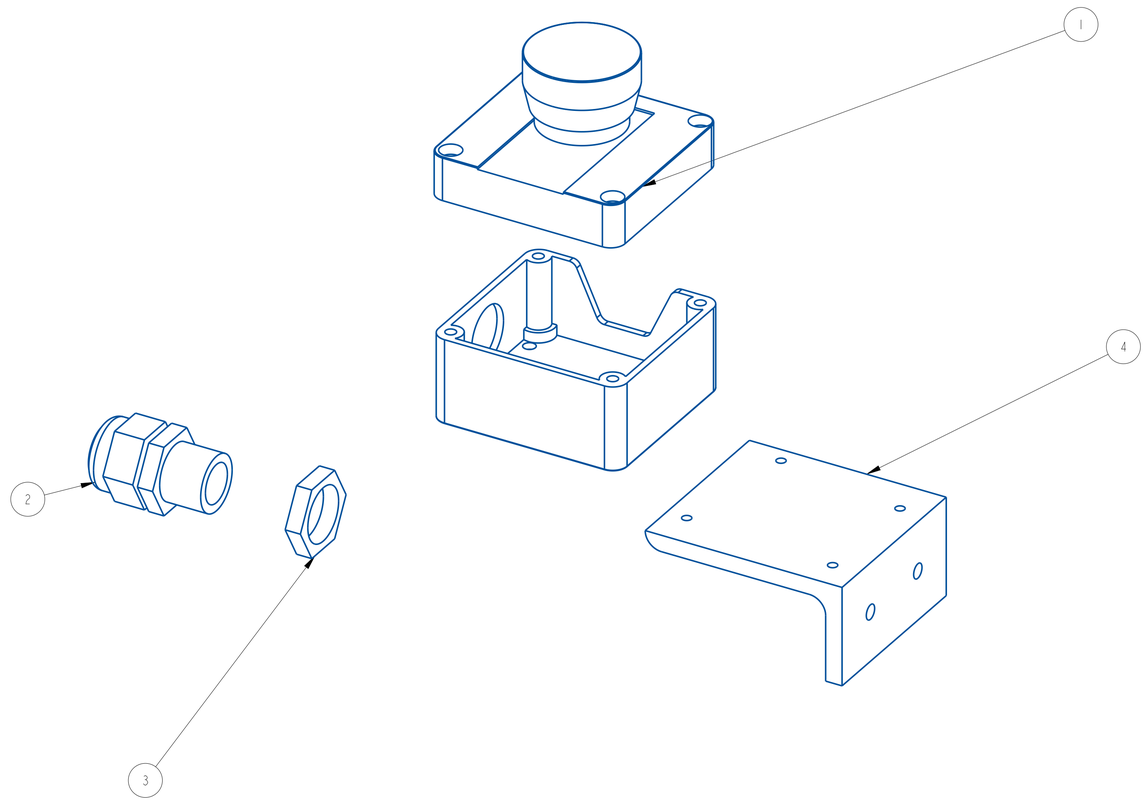


| REV | DATE | DESCRIPTION | BY |
|---|---|---|---|
| A | 8-29-16 | NEW DRAWING | TJS |

THIS IS A PRO-ENGINEER DOCUMENT AND MAY NOT BE MODIFIED MANUALLY

UNLESS OTHERWISE SPECIFIED
DIMENSIONAL TOLERANCE
.X ± .1
.XX ± .01
.XXX ± .005
ANGLES ± 30'

SURFACE FINISH 125
BREAK ALL EDGES .005/.015
CORNER RADIUS .010/.030


QUADREL LABELING SYSTEMS
7670 JENTHER DRIVE
MENTOR, OHIO 44060
(440) 602-4700


SCALE: 1/1
DATE: 8-29-16
DRW BY: TJS
CHK BY: 03/08/2024-SEM
APPR BY:

EMERGENCY STOP ASSEMBLY

MAT'L

20789-000

SHEET 1 OF 2

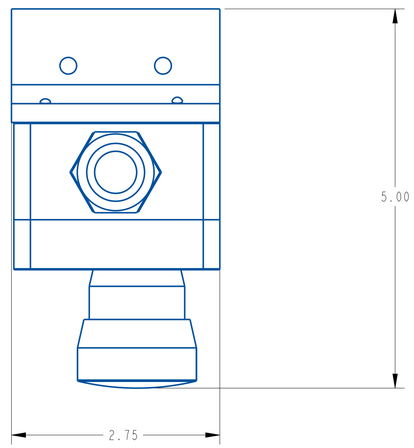


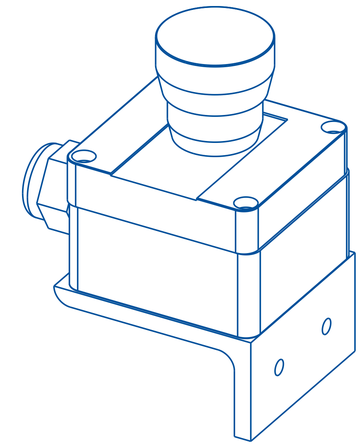

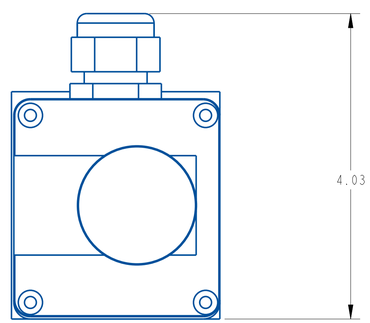


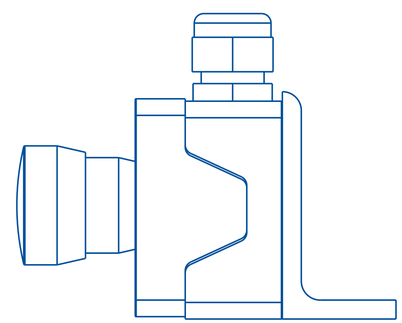

| REV | DATE | DESCRIPTION | BY |
|---|---|---|---|
| A | 8-29-16 | NEW DRAWING | TJS |

THIS IS A PRO-ENGINEER DOCUMENT AND MAY NOT BE MODIFIED MANUALLY

UNLESS OTHERWISE SPECIFIED
DIMENSIONAL TOLERANCE
X ± .1
XX ± .01
XXX ± .005
ANGLES ± 30'

SURFACE FINISH 125
BREAK ALL EDGES .005/.015
CORNER RADIUS .010/.030
ALL ANGLES ARE 90°

QUADREL LABELING SYSTEMS
7670 JENTHER DRIVE
MENTOR, OHIO 44060
(440) 602-4700

SCALE: 1/1
DATE: 8-29-16
DRW BY: TJS
CHK BY:03/08/2024-SEM
APPR BY:

EMERGENCY STOP ASSEMBLY

MAT'L

20789-000

SHEET 2 OF 2

**ASSEMBLY TITLE: HEAD SUPPORT ASSEMBLY**

**GENERAL FUNCTION:**

The head support assembly keeps the labeling head in a “locked position” and prevents head vibration and wobbling as the label motor is engaged. The head support assembly is also used to set the camber or front/back tilt of the head.

**SETUP AND ADJUSTMENTS:**

HORIZONTAL ADJUSTMENT: To set the horizontal position of the labeling head, use the side mount wheel handle (some older systems may feature the ratcheted handle). Turn the handle clockwise to move the head towards the conveyor. Turn it counter clockwise to move the head away from the conveyor.

VERTICAL ADJUSTMENT: Using the lower wheel handle to set the vertical position of the labeling head. Turn the wheel clockwise to lower labeling head. Turn the wheel counter clockwise to raise the labeling head.

**MAINTENANCE:**

No scheduled maintenance is required for this assembly. Always keep the drive areas free of label flash and debris.

**TROUBLESHOOTING: None this section.**

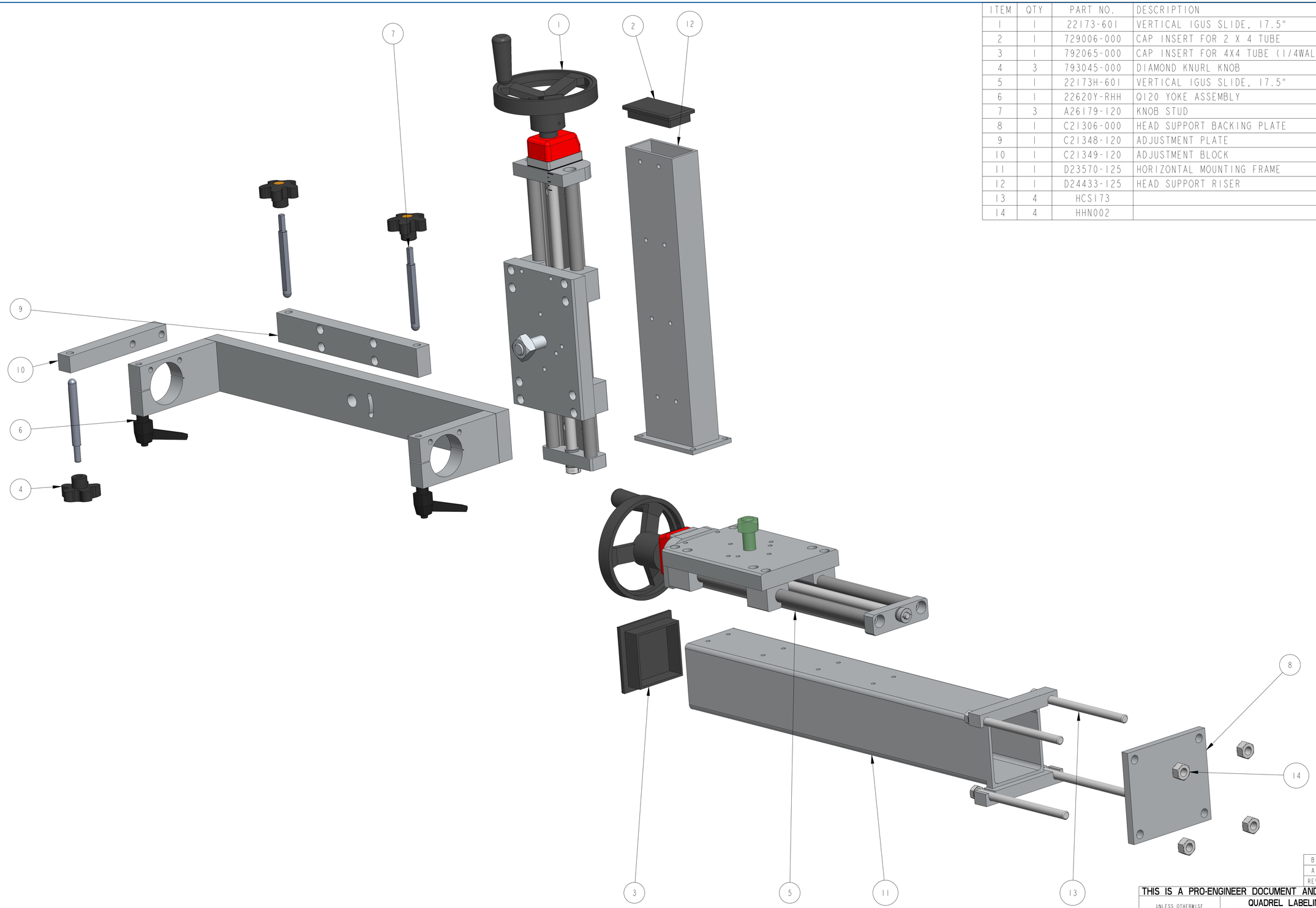


| ITEM | QTY | PART NO. | DESCRIPTION | PARENT ITEM |
|---|---|---|---|---|
| 1 | 1 | 22173-601 | VERTICAL IGUS SLIDE, 17.5" | 22530-220-RH |
| 2 | 1 | 729006-000 | CAP INSERT FOR 2 X 4 TUBE | 22530-220-RH |
| 3 | 1 | 792065-000 | CAP INSERT FOR 4X4 TUBE (1/4WALL) | 22530-220-RH |
| 4 | 3 | 793045-000 | DIAMOND KNURL KNOB | 22530-220-RH |
| 5 | 1 | 22173H-601 | VERTICAL IGUS SLIDE, 17.5" | 22530-220-RH |
| 6 | 1 | 22620Y-RHH | Q120 YOKE ASSEMBLY | 22530-220-RH |
| 7 | 3 | A26179-120 | KNOB STUD | 22530-220-RH |
| 8 | 1 | C21306-000 | HEAD SUPPORT BACKING PLATE | 22530-220-RH |
| 9 | 1 | C21348-120 | ADJUSTMENT PLATE | 22530-220-RH |
| 10 | 1 | C21349-120 | ADJUSTMENT BLOCK | 22530-220-RH |
| 11 | 1 | D23570-125 | HORIZONTAL MOUNTING FRAME | 22530-220-RH |
| 12 | 1 | D24433-125 | HEAD SUPPORT RISER | 22530-220-RH |
| 13 | 4 | HCS173 | | 22530-220-RH |
| 14 | 4 | HHN002 | | 22530-220-RH |

| REV | DATE | DESCRIPTION | BY |
|---|---|---|---|
| B | 20-FEB-2024 | UPDATE THE DRAWING AND BOM | CRT |
| A | OCT-27-22 | NEW DRAWING | TJS |

THIS IS A PRO-ENGINEER DOCUMENT AND MAY NOT BE MODIFIED MANUALLY

UNLESS OTHERWISE SPECIFIED
DIMENSIONAL TOLERANCE
X ± .1
XX ± .01
XXX ± .005
ANGLES ± 30°

SURFACE FINISH 125
BREAK ALL EDGES .005/.015
CORNER RADIUS .010/.030

QUADREL LABELING SYSTEMS
7670 JENTHER DRIVE
MENTOR, OHIO 44060
(440) 602-4700

SCALE: 3/8
DATE: Oct-27-22
DRW BY: TJS
CHK BY: 03/07/2024-SEM
APPR BY:

OPENLINE HEAD SUPPORT FOR Q120 W/ SIKO

MAT'L

22530-220-RH

SHEET 1 OF 2

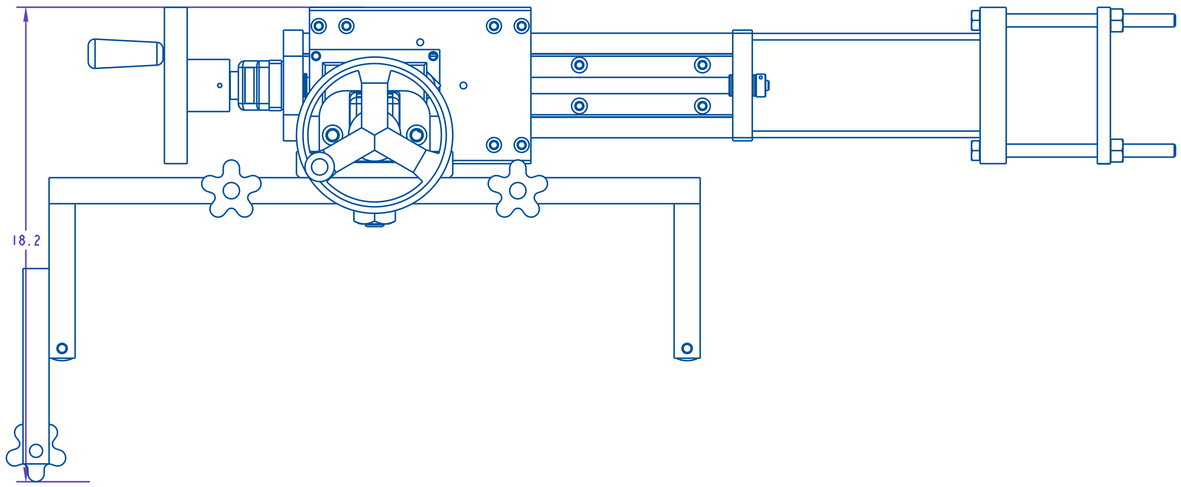


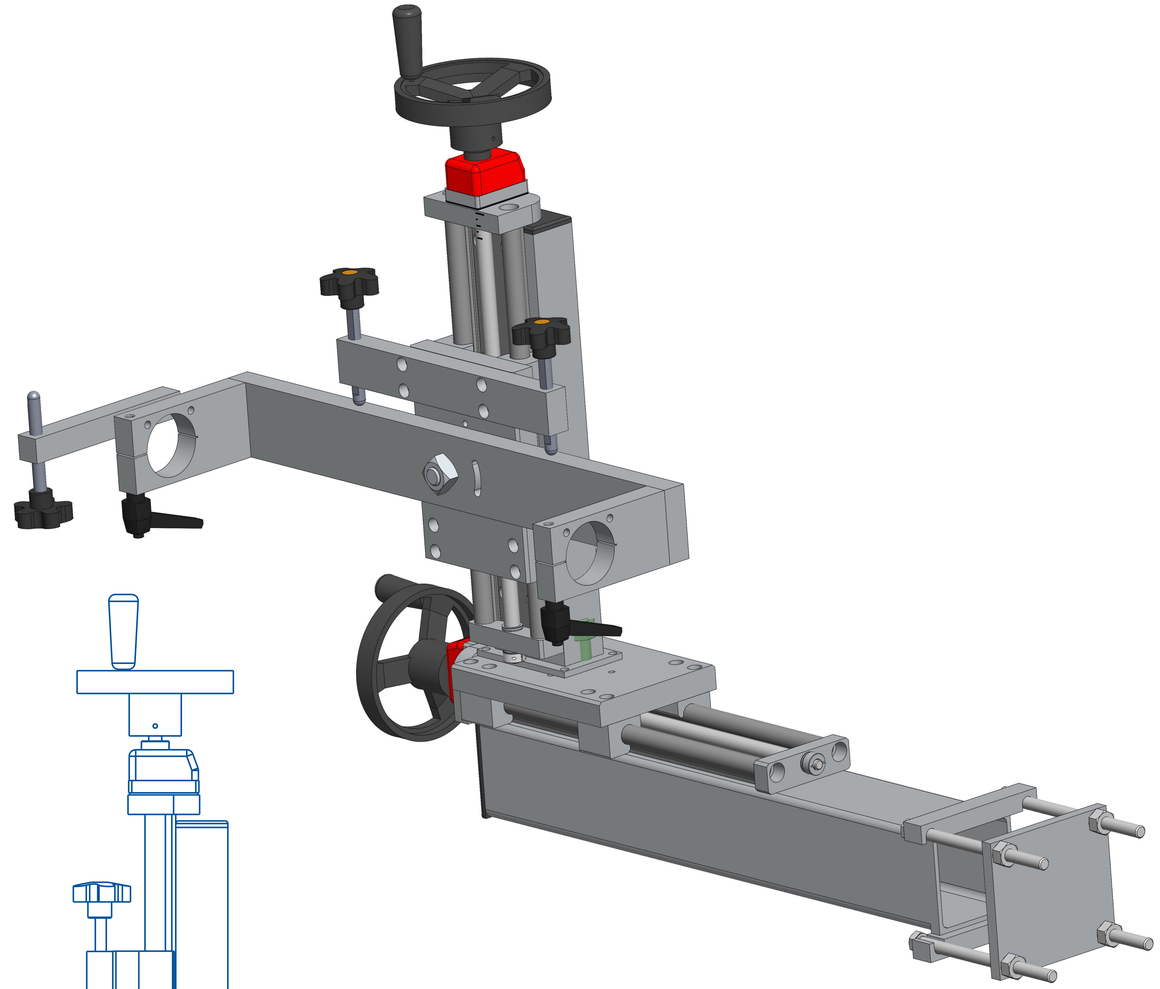

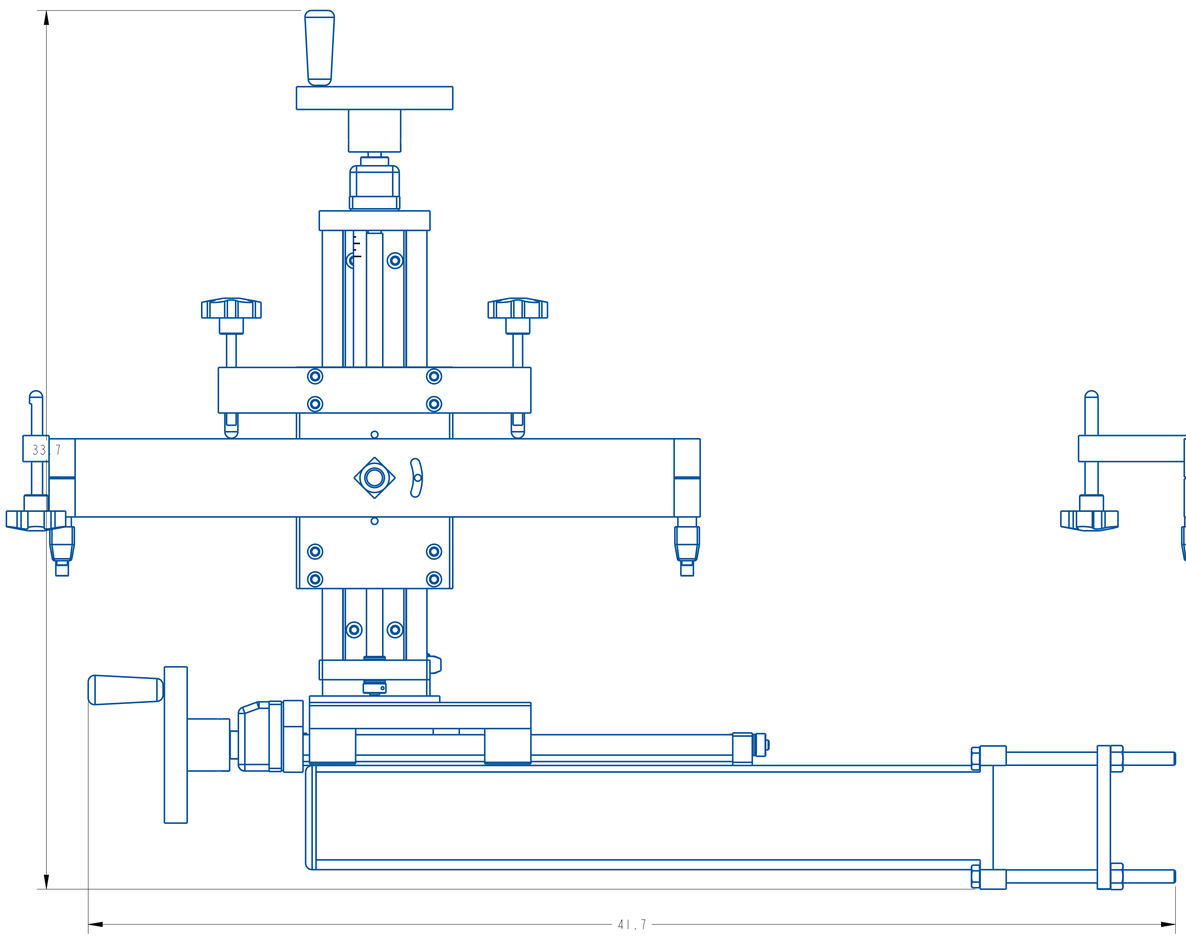


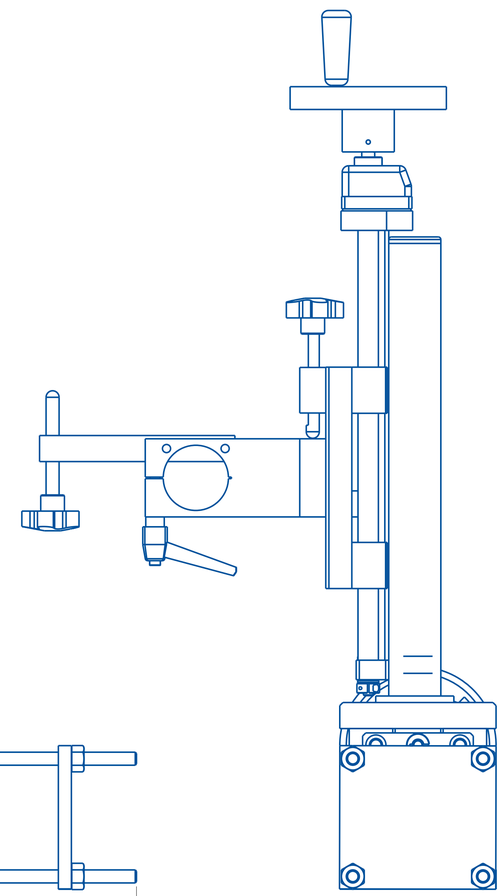

| REV | DATE | DESCRIPTION | BY |
|---|---|---|---|
| A | Oct-27-22 | NEW DRAWING | TJS |

THIS IS A PRO-ENGINEER DOCUMENT AND MAY NOT BE MODIFIED MANUALLY

UNLESS OTHERWISE SPECIFIED
DIMENSIONAL TOLERANCE
.X ± .1
.XX ± .01
.XXX ± .005
ANGLES ± 30'

SURFACE FINISH 125
BREAK ALL EDGES .005/.015
CORNER RADIUS .010/.030
ALL ANGLES ARE 90°

QUADREL LABELING SYSTEMS
7670 JENTHER DRIVE
MENTOR, OHIO 44060
(440) 602-4700

SCALE: 11/32
DATE: Oct-27-22
DRW BY: TJS
CHK BY:03/07/2024-SEM
APPR BY:

OPENLINE HEAD SUPPORT FOR Q120 W/ SIKO

MAT'L

22530-220-RH

SHEET 2 OF 2

| ITEM | QTY | PART NO. | DESCRIPTION | PARENT ITEM |
|---|---|---|---|---|
| 1 | 1 | 141172-000 | SLEEVE BEARING, 1/2OD. x 3/8ID. x 3/4LNG | 22173-601 |
| 2 | 1 | 141177-000 | SLEEVE BEARING, 5/8OD. x 1/2ID. x 3/4LNG | 22173-601 |
| 3 | 1 | 181079-000 | BEARING, NEEDLE ROLLER | 22173-601 |
| 4 | 2 | 181080-000 | BEARING, THRUST WASHER | 22173-601 |
| 5 | 2 | 181108-000 | BEARING, NEEDLE ROLLER | 22173-601 |
| 6 | 4 | 181111-000 | THRUST WASHER | 22173-601 |
| 7 | 1 | 361169-000 | COLLAR, 1/2 IN. ID ONE-PIECE CLAMP | 22173-601 |
| 8 | 1 | 362186-000 | COLLAR, 3/8 IN. ID ONE-PIECE CLAMP | 22173-601 |
| 9 | 1 | 791914-001_10 | MYLAR SCALE, QUADREL LOGO | 22173-601 |
| 10 | 4 | 792248-001 | PILLOW BLOCK | 22173-601 |
| 11 | 1 | 792354-000 | DIGITAL POSITION INDICATOR | 22173-601 |
| 12 | 1 | 792355-000 | DRYLIN RAIL | 22173-601 |
| 13 | 1 | 801080-000 | HANDLE WHEEL, MODIFIED | 22173-601 |
| 14 | 1 | A24077-000 | BRONZE NUT, RH | 22173-601 |
| 15 | 1 | B20045-111 | THREADED ROD | 22173-601 |
| 16 | 1 | B21346-000 | BOTTOM BEARING PLATE | 22173-601 |
| 17 | 1 | B22005-012 | BEARING PLATE | 22173-601 |
| 18 | 1 | C20626-000 | STAND SLED | 22173-601 |
| 19 | 1 | HCS281 | | 22173-601 |
| 20 | 1 | SQN022 | | 22173-601 |

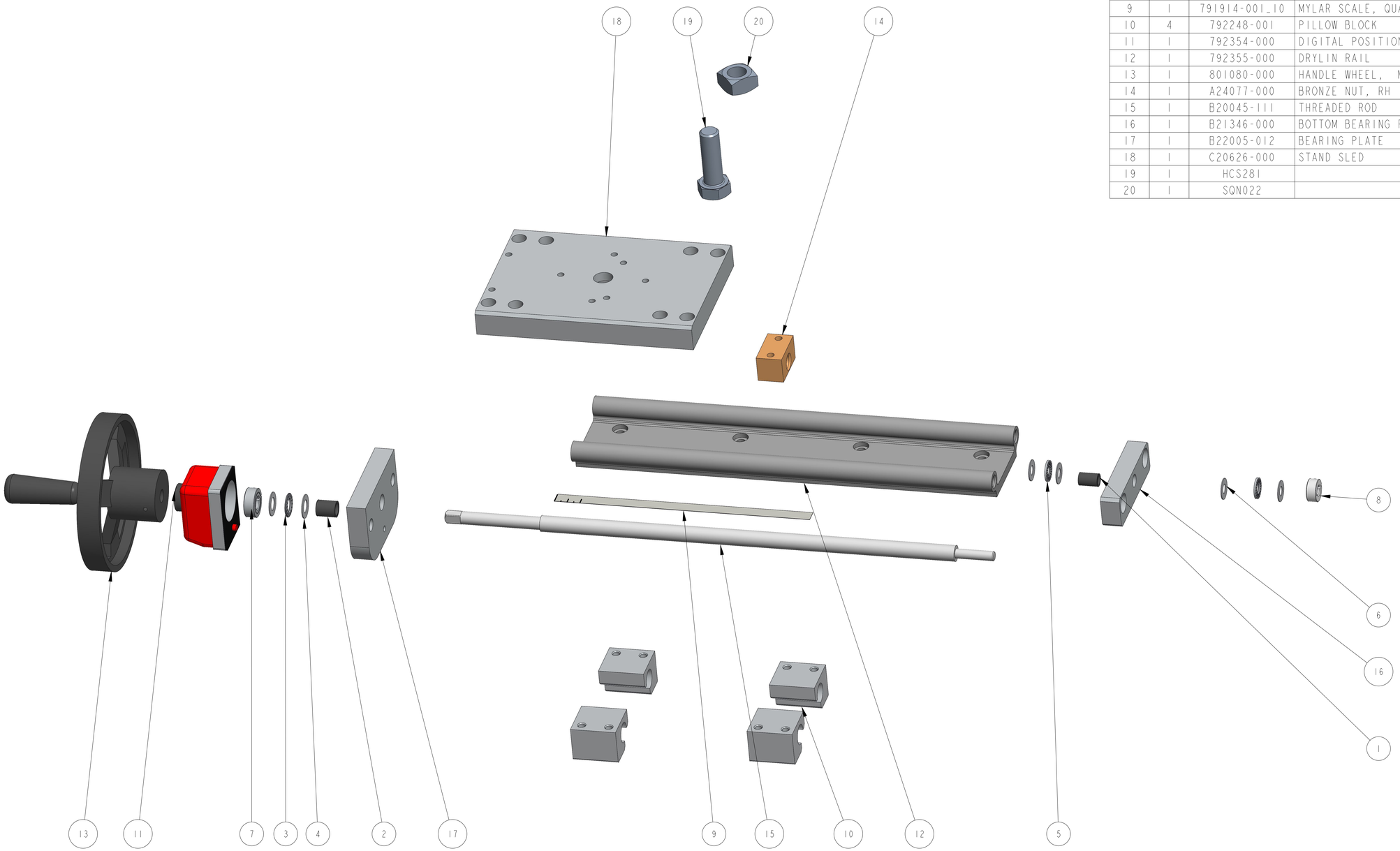


| REV | DATE | DESCRIPTION | BY |
|---|---|---|---|
| A | 3-25-20 | NEW DRAWING | ATT |

THIS IS A PRO-ENGINEER DOCUMENT AND MAY NOT BE MODIFIED MANUALLY

UNLESS OTHERWISE SPECIFIED
DIMENSIONAL TOLERANCE
.X ± .1
.XX ± .01
.XXX ± .005
ANGLES ± 30'

SURFACE FINISH 125
BREAK ALL EDGES .005/.015
CORNER RADIUS .010/.030

QUADREL LABELING SYSTEMS
7670 JENTHER DRIVE
MENTOR, OHIO 44060
(440) 602-4700

SCALE: 1/2
DATE: 3-25-20
DRW BY: ATT
CHK BY: 03/02/24-SEM
APPR BY:

VERTICAL IGUS SLIDE, 17.5"

MAT'L 22173-000

22173-601

SHEET 1 OF 2

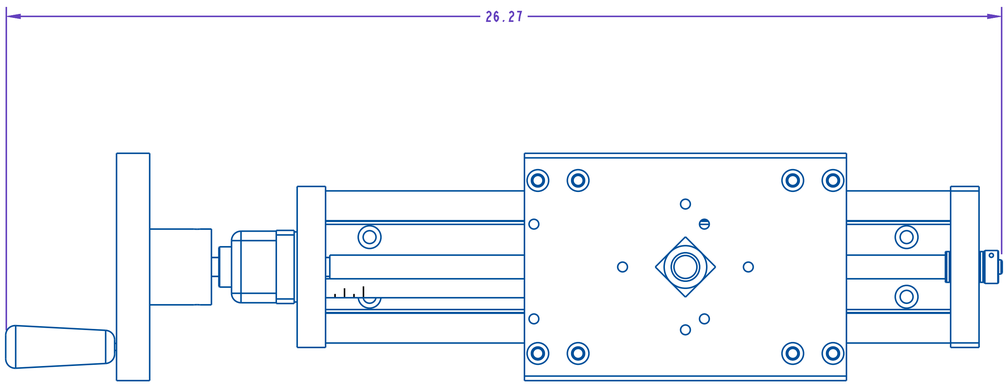


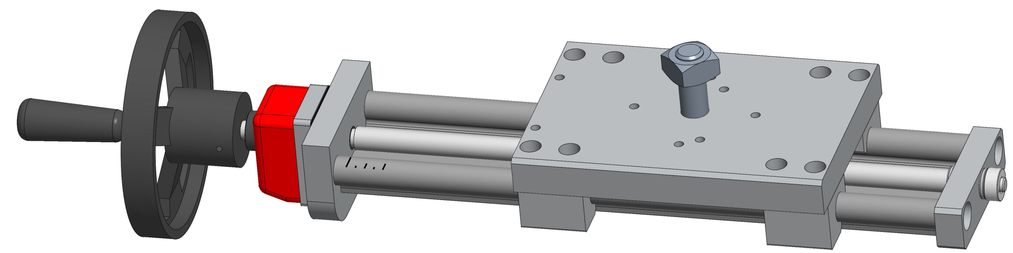

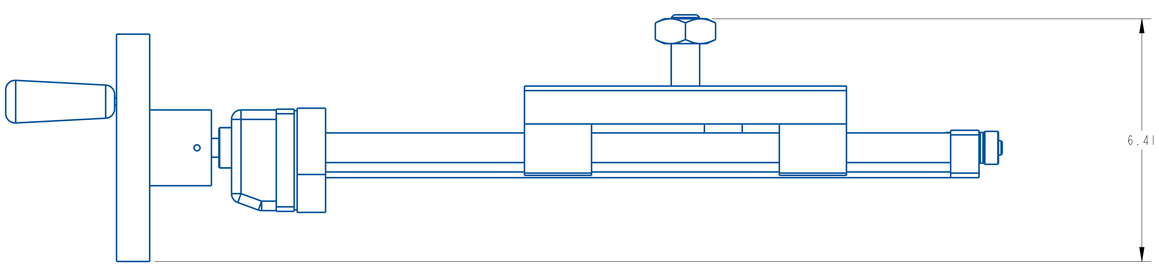


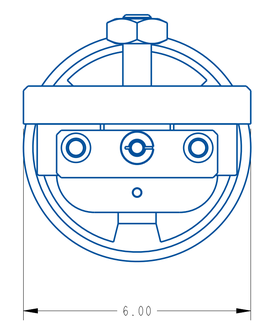


| REV | DATE | DESCRIPTION | BY |
|---|---|---|---|
| A | 3-25-20 | NEW DRAWING | ATT |

THIS IS A PRO-ENGINEER DOCUMENT AND MAY NOT BE MODIFIED MANUALLY

UNLESS OTHERWISE SPECIFIED
DIMENSIONAL TOLERANCE
X ± .1
XX ± .01
XXX ± .005
ANGLES ± 30'
SURFACE FINISH 125
BREAK ALL EDGES .005/.015
CORNER RADIUS .010/.030
ALL ANGLES ARE 90°

QUADREL LABELING SYSTEMS
7670 JENTHER DRIVE
MENTOR, OHIO 44060
(440) 602-4700

SCALE: 1/2
DATE: 3-25-20
DRW BY: ATT
CHK BY: 03/02/24-SEM
APPR BY:

VERTICAL IGUS SLIDE, 17.5"

MAT'L 22173-000

22173-601

SHEET 2 OF 2

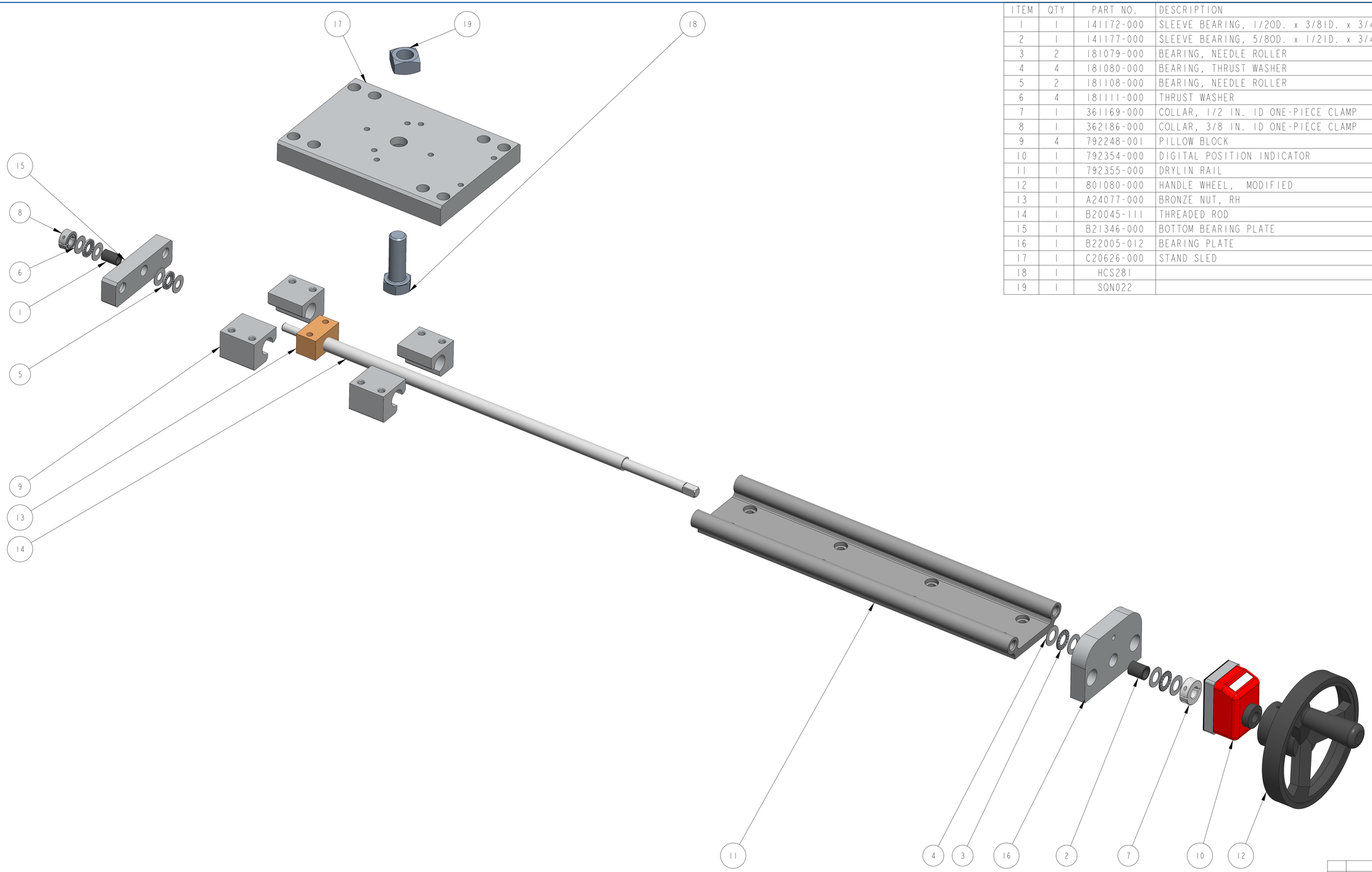


| ITEM | QTY | PART NO. | DESCRIPTION | PARENT ITEM |
|---|---|---|---|---|
| 1 | 1 | 141172-000 | SLEEVE BEARING, 1/2OD. x 3/8ID. x 3/4LNG | 22173H-601 |
| 2 | 1 | 141177-000 | SLEEVE BEARING, 5/8OD. x 1/2ID. x 3/4LNG | 22173H-601 |
| 3 | 2 | 181079-000 | BEARING, NEEDLE ROLLER | 22173H-601 |
| 4 | 4 | 181080-000 | BEARING, THRUST WASHER | 22173H-601 |
| 5 | 2 | 181108-000 | BEARING, NEEDLE ROLLER | 22173H-601 |
| 6 | 4 | 181111-000 | THRUST WASHER | 22173H-601 |
| 7 | 1 | 361169-000 | COLLAR, 1/2 IN. ID ONE-PIECE CLAMP | 22173H-601 |
| 8 | 1 | 362186-000 | COLLAR, 3/8 IN. ID ONE-PIECE CLAMP | 22173H-601 |
| 9 | 4 | 792248-001 | PILLOW BLOCK | 22173H-601 |
| 10 | 1 | 792354-000 | DIGITAL POSITION INDICATOR | 22173H-601 |
| 11 | 1 | 792355-000 | DRYLIN RAIL | 22173H-601 |
| 12 | 1 | 801080-000 | HANDLE WHEEL, MODIFIED | 22173H-601 |
| 13 | 1 | A24077-000 | BRONZE NUT, RH | 22173H-601 |
| 14 | 1 | B20045-111 | THREADED ROD | 22173H-601 |
| 15 | 1 | B21346-000 | BOTTOM BEARING PLATE | 22173H-601 |
| 16 | 1 | B22005-012 | BEARING PLATE | 22173H-601 |
| 17 | 1 | C20626-000 | STAND SLED | 22173H-601 |
| 18 | 1 | HCS281 | | 22173H-601 |
| 19 | 1 | SQN022 | | 22173H-601 |

| REV | DATE | DESCRIPTION | BY |
|---|---|---|---|
| A | 2-24-20 | NEW DRAWING | TJS |

THIS IS A PRO-ENGINEER DOCUMENT AND MAY NOT BE MODIFIED MANUALLY

UNLESS OTHERWISE SPECIFIED
DIMENSIONAL TOLERANCE
.X ± .1
.XX ± .01
.XXX ± .005
ANGLES ± 30'

SURFACE FINISH 125
BREAK ALL EDGES .005/.015
CORNER RADIUS .010/.030

QUADREL LABELING SYSTEMS
7670 JENTHER DRIVE
MENTOR, OHIO 44060
(440) 602-4700

SCALE: 1/2
DATE: 2-24-20
DRW BY: TJS
CHK BY: 03/02/24-SEM
APPR BY:

VERTICAL IGUS SLIDE, 17.5"

MAT'L

22173H-601

SHEET 1 OF 2

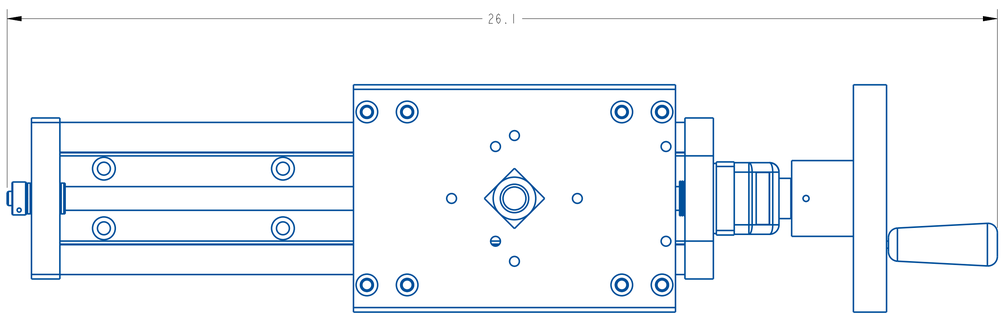


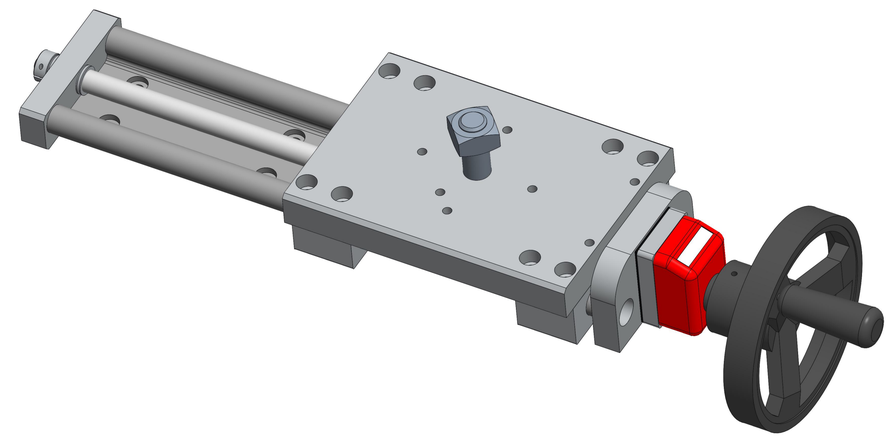

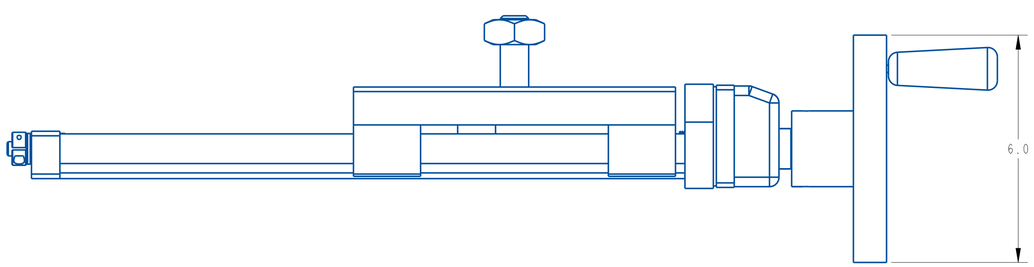


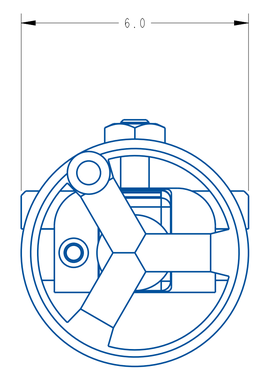


| REV | DATE | DESCRIPTION | BY |
|---|---|---|---|
| A | 2-24-20 | NEW DRAWING | TJS |

THIS IS A PRO-ENGINEER DOCUMENT AND MAY NOT BE MODIFIED MANUALLY

UNLESS OTHERWISE SPECIFIED
DIMENSIONAL TOLERANCE
X ± .1
XX ± .01
XXX ± .005
ANGLES ± 30'
SURFACE FINISH 125
BREAK ALL EDGES .005/.015
CORNER RADIUS .010/.030
ALL ANGLES ARE 90°

QUADREL LABELING SYSTEMS
7670 JENTHER DRIVE
MENTOR, OHIO 44060
(440) 602-4700

SCALE: 1/2
DATE: 2-24-20
DRW BY: TJS
CHK BY: 03/02/24-SEM
APPR BY:

VERTICAL IGUS SLIDE, 17.5"

MAT'L

22173H-601

SHEET 2 OF 2

| ITEM | QTY | PART NO. | DESCRIPTION | PARENT ITEM |
|---|---|---|---|---|
| 1 | 2 | 801850-000 | CLAMPING LEVER | 22620Y-RHH |
| 2 | 2 | B21190-114 | YOKE SIDE PLATE | 22620Y-RHH |
| 3 | 1 | B21555-000 | MTG YOKE BACK PLATE | 22620Y-RHH |

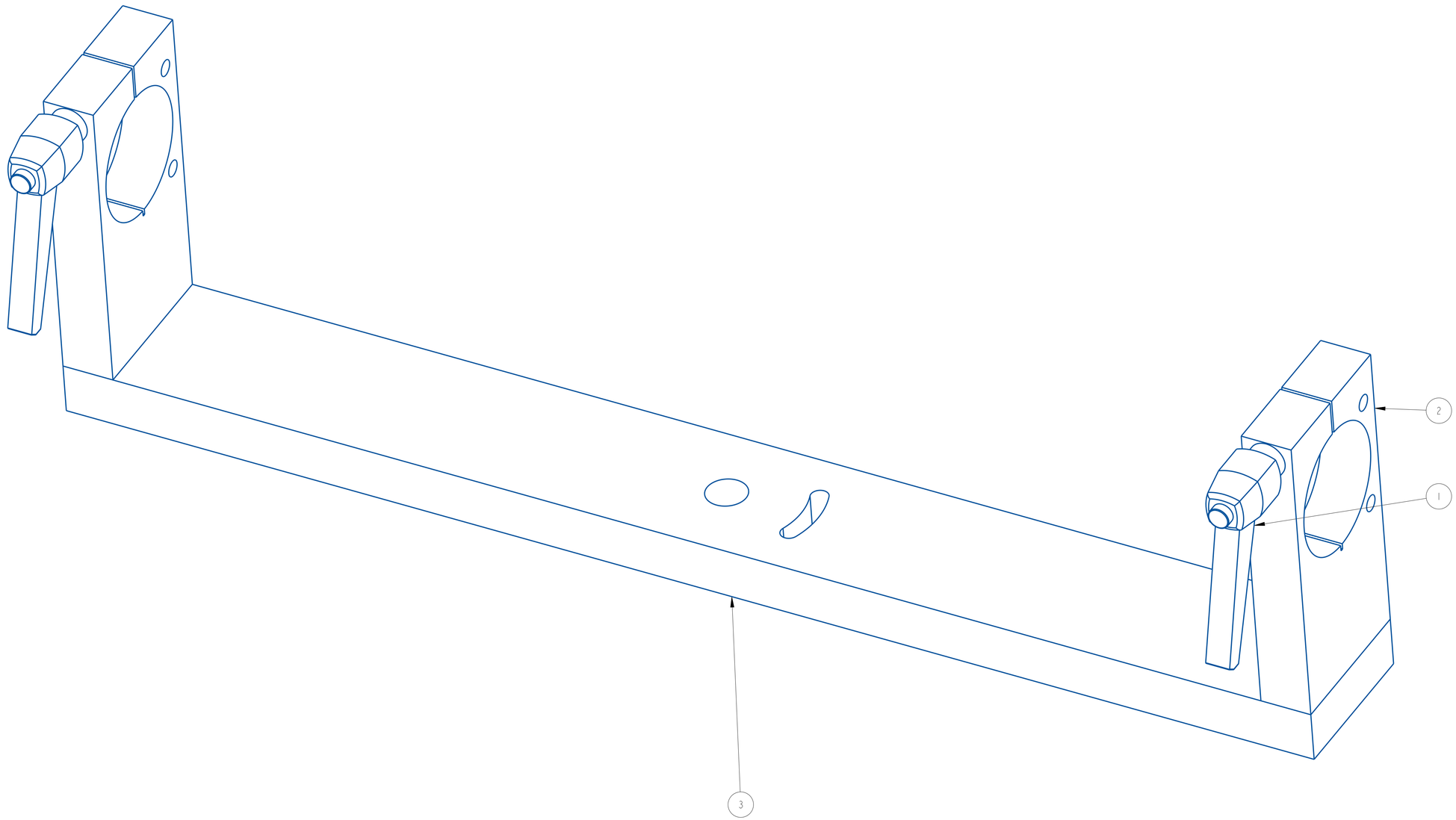


| REV | DATE | DESCRIPTION | BY |
|---|---|---|---|
| A | 11-26-13 | NEW DRAWING | ATT |

THIS IS A PRO-ENGINEER DOCUMENT AND MAY NOT BE MODIFIED MANUALLY

UNLESS OTHERWISE SPECIFIED
DIMENSIONAL TOLERANCE
.X ± .1
.XX ± .01
.XXX ± .005
ANGLES ± 30'

SURFACE FINISH 125
BREAK ALL EDGES .005/.015
CORNER RADIUS .010/.030


QUADREL LABELING SYSTEMS
7670 JENTHER DRIVE
MENTOR, OHIO 44060
(440) 602-4700


SCALE: 1/1
DATE: 11-26-13
DRW BY: ATT
CHK BY: 03/07/2024-SEM
APPR BY:

Q120 YOKE ASSEMBLY

MAT'L

22620Y-RHH

SHEET 1 OF 2

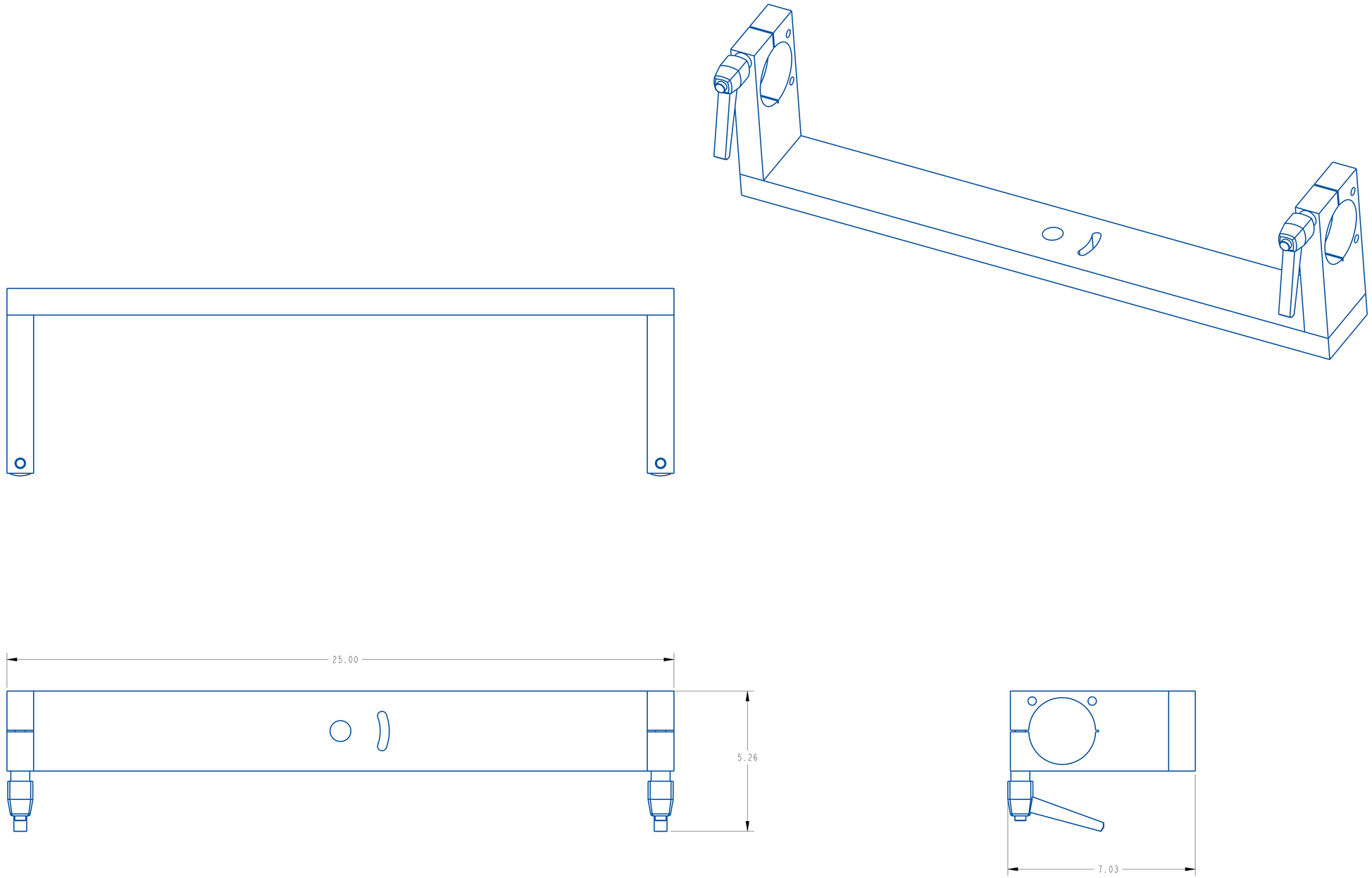


| REV | DATE | DESCRIPTION | BY |
|---|---|---|---|
| A | 11-26-13 | NEW DRAWING | ATT |

THIS IS A PRO-ENGINEER DOCUMENT AND MAY NOT BE MODIFIED MANUALLY

UNLESS OTHERWISE SPECIFIED
DIMENSIONAL TOLERANCE
X ± .1
XX ± .01
XXX ± .005
ANGLES ± 30'
SURFACE FINISH 125
BREAK ALL EDGES .005/.015
CORNER RADIUS .010/.030
ALL ANGLES ARE 90°

QUADREL LABELING SYSTEMS
7670 JENTHER DRIVE
MENTOR, OHIO 44060
(440) 602-4700

SCALE: 1/2
DATE: 11-26-13
DRW BY: ATT
CHK BY:03/07/2024-SEM
APPR BY:

Q120 YOKE ASSEMBLY

MAT'L

22620Y-RHH

SHEET 2 OF 2

**ASSEMBLY TITLE: HEAD SUPPORT ASSEMBLY**

**GENERAL FUNCTION:**

The head support assembly keeps the labeling head in a “locked position” and prevents head vibration and wobbling as the label motor is engaged. The head support assembly is also used to set the camber or front/back tilt of the head.

**SETUP AND ADJUSTMENTS:**

HORIZONTAL ADJUSTMENT: To set the horizontal position of the labeling head, use the side mount wheel handle (some older systems may feature the ratcheted handle). Turn the handle clockwise to move the head towards the conveyor. Turn it counter clockwise to move the head away from the conveyor.

VERTICAL ADJUSTMENT: Using the lower wheel handle to set the vertical position of the labeling head. Turn the wheel clockwise to lower labeling head. Turn the wheel counter clockwise to raise the labeling head.

**MAINTENANCE:**

No scheduled maintenance is required for this assembly. Always keep the drive areas free of label flash and debris.

**TROUBLESHOOTING: None this section.**

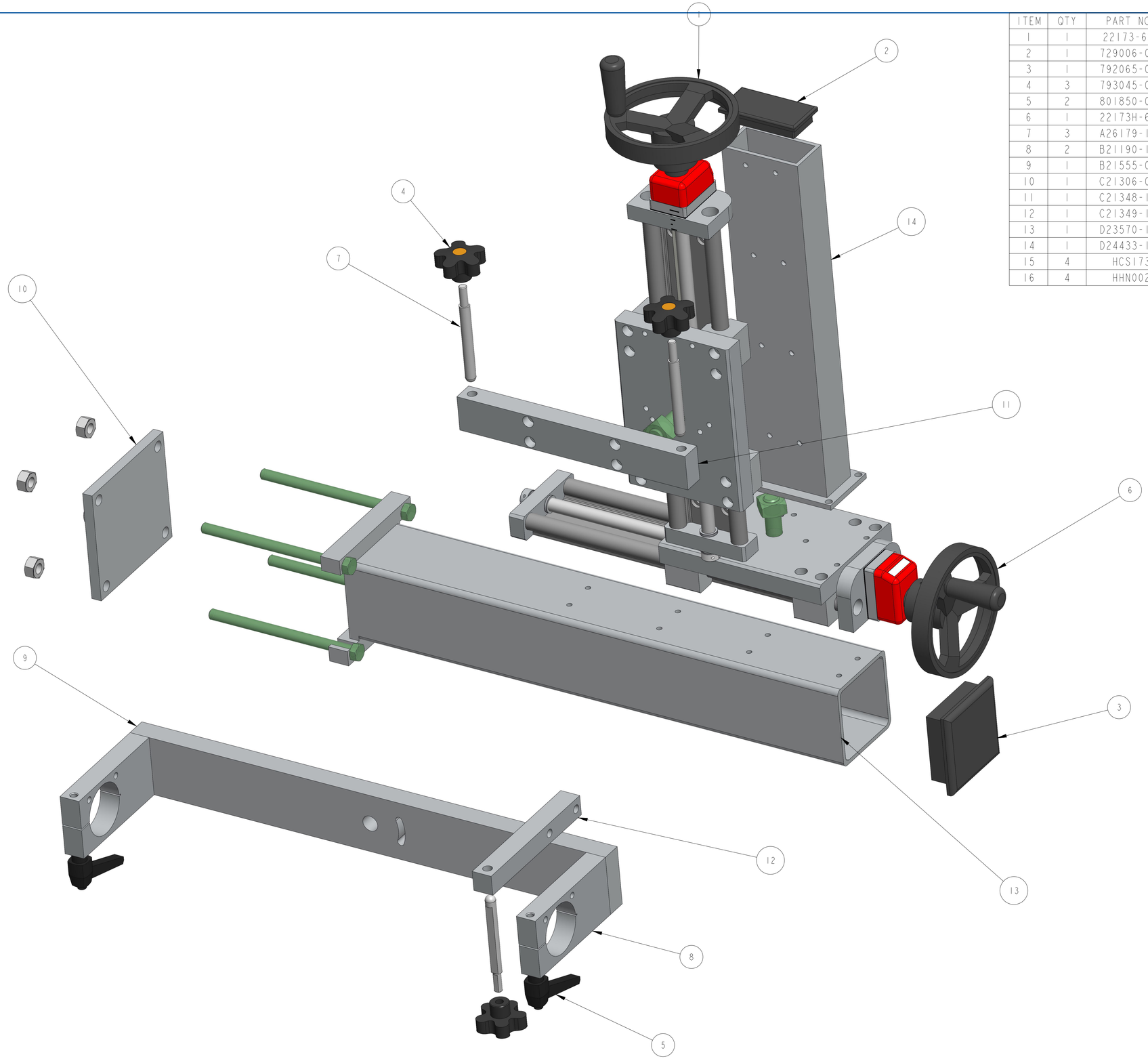


| ITEM | QTY | PART NO. | DESCRIPTION | PARENT ITEM |
|---|---|---|---|---|
| 1 | 1 | 22173-601 | VERTICAL IGUS SLIDE, 17.5" | 22530-220-LH |
| 2 | 1 | 729006-000 | CAP INSERT FOR 2 X 4 TUBE | 22530-220-LH |
| 3 | 1 | 792065-000 | CAP INSERT FOR 4X4 TUBE (1/4WALL) | 22530-220-LH |
| 4 | 3 | 793045-000 | DIAMOND KNURL KNOB | 22530-220-LH |
| 5 | 2 | 801850-000 | CLAMPING LEVER | 22530-220-LH |
| 6 | 1 | 22173H-601 | VERTICAL IGUS SLIDE, 17.5" | 22530-220-LH |
| 7 | 3 | A26179-120 | KNOB STUD | 22530-220-LH |
| 8 | 2 | B21190-114 | YOKE SIDE PLATE | 22530-220-LH |
| 9 | 1 | B21555-000 | MTG YOKE BACK PLATE | 22530-220-LH |
| 10 | 1 | C21306-000 | HEAD SUPPORT BACKING PLATE | 22530-220-LH |
| 11 | 1 | C21348-120 | ADJUSTMENT PLATE | 22530-220-LH |
| 12 | 1 | C21349-120 | ADJUSTMENT BLOCK | 22530-220-LH |
| 13 | 1 | D23570-125 | HORIZONTAL MOUNTING FRAME | 22530-220-LH |
| 14 | 1 | D24433-125 | HEAD SUPPORT RISER | 22530-220-LH |
| 15 | 4 | HCS173 | | 22530-220-LH |
| 16 | 4 | HHN002 | | 22530-220-LH |

| REV | DATE | DESCRIPTION | BY |
|---|---|---|---|
| B | 20-FEB-2024 | UPDATED THE DRAWING AND BOM | CRT |
| A | OCT-27-22 | NEW DRAWING | TJS |

THIS IS A PRO-ENGINEER DOCUMENT AND MAY NOT BE MODIFIED MANUALLY

UNLESS OTHERWISE SPECIFIED
DIMENSIONAL TOLERANCE
.X ± .1
.XX ± .01
.XXX ± .005
ANGLES ± 30'

SURFACE FINISH 125
BREAK ALL EDGES .005/.015
CORNER RADIUS .010/.030"

QUADREL LABELING SYSTEMS
7670 JENTHER DRIVE
MENTOR, OHIO 44060
(440) 602-4700

SCALE: 1/16
DATE: OCT-27-22
DRW BY: TJS
CHK BY: 03/02/24-SEM
APPR BY:

OPENLINE HEAD SUPPORT FOR Q120 W/ SIKO

MAT'L 22530-220-LH

22530-220-LH

SHEET 1 OF 2

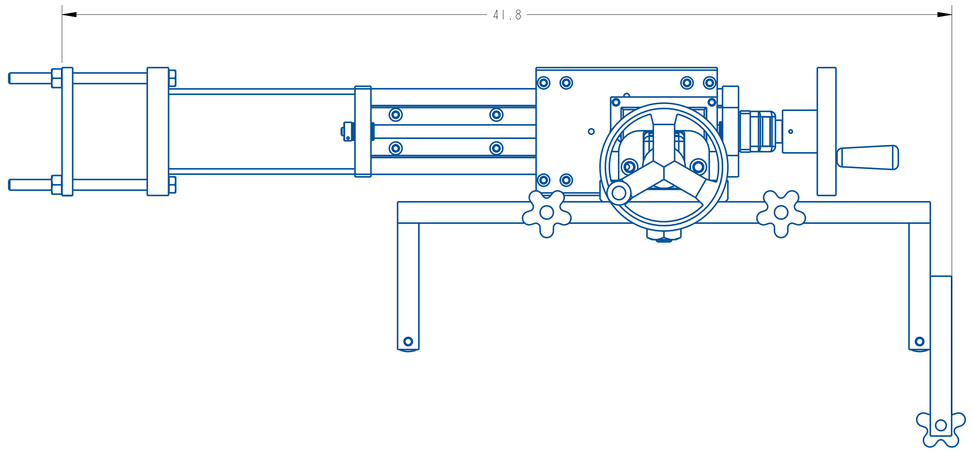


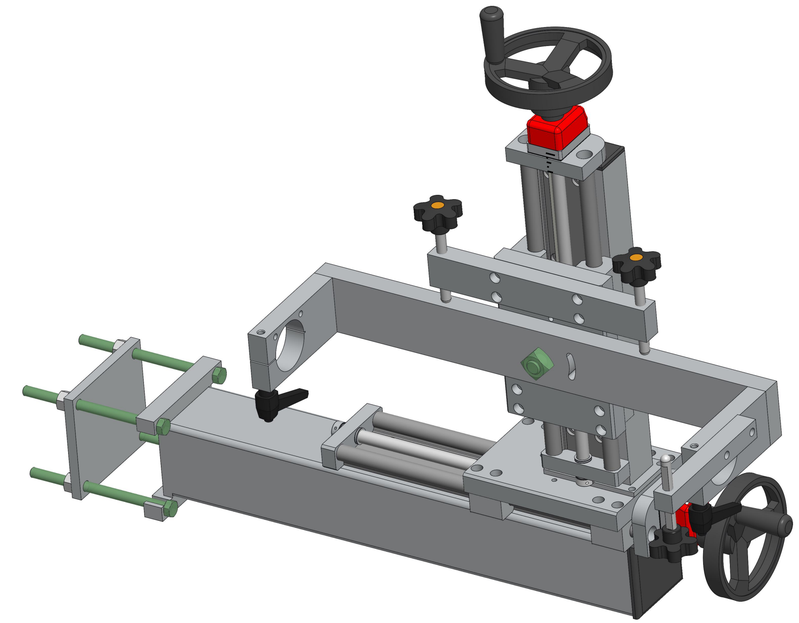

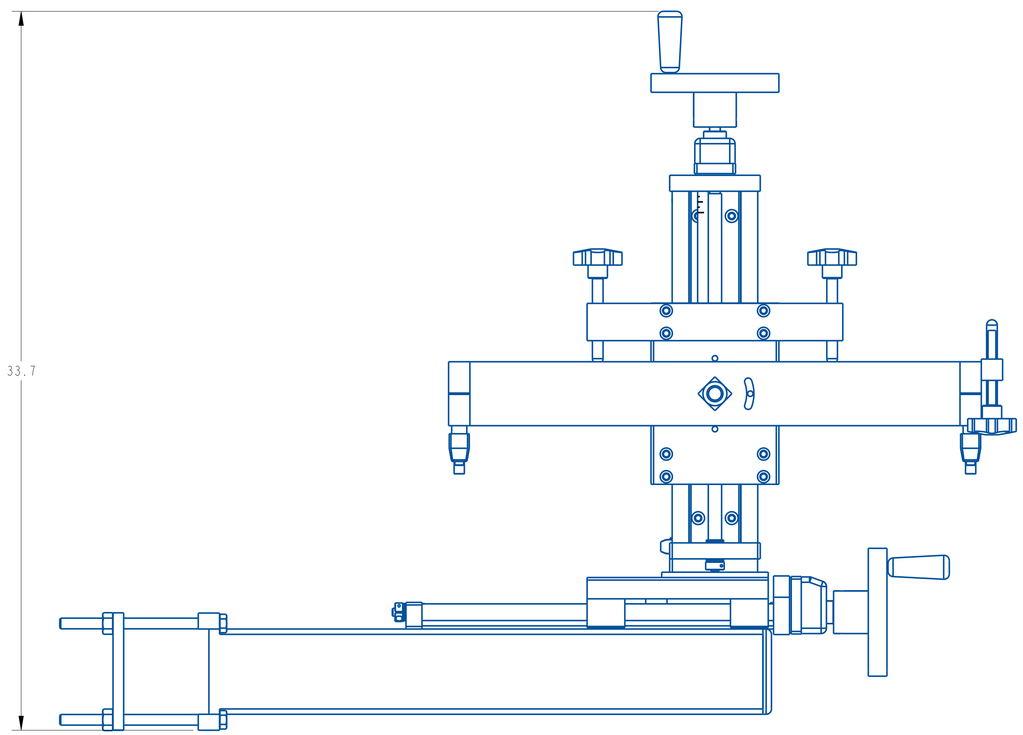


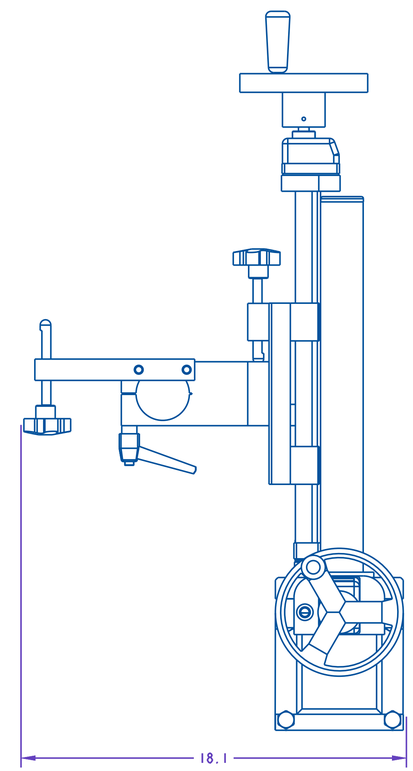


| REV | DATE | DESCRIPTION | BY |
|---|---|---|---|
| B | 20-FEB-2024 | UPDATE THE DRAWING AND BOM | CRT |
| A | OCT-27-22 | NEW DRAWING | TJS |

THIS IS A PRO-ENGINEER DOCUMENT AND MAY NOT BE MODIFIED MANUALLY

UNLESS OTHERWISE SPECIFIED
DIMENSIONAL TOLERANCE
.X ± .1
.XX ± .01
.XXX ± .005
ANGLES ± 30'

SURFACE FINISH 125
BREAK ALL EDGES .005/.015
CORNER RADIUS .010/.030

QUADREL LABELING SYSTEMS
7670 JENTHER DRIVE
MENTOR, OHIO 44060
(440) 602-4700

SCALE: 9/32
DATE: OCT-27-22
DRW BY: TJS
CHK BY: 03/02/24-SEM
APPR BY:

OPENLINE HEAD SUPPORT FOR Q120 W/ SIKO

MAT'L 22530-220-LH

22530-220-LH

SHEET 2 OF 2

| ITEM | QTY | PART NO. | DESCRIPTION | PARENT ITEM |
|---|---|---|---|---|
| 1 | 1 | 141172-000 | SLEEVE BEARING, 1/2OD. x 3/8ID. x 3/4LNG | 22173-601 |
| 2 | 1 | 141177-000 | SLEEVE BEARING, 5/8OD. x 1/2ID. x 3/4LNG | 22173-601 |
| 3 | 1 | 181079-000 | BEARING, NEEDLE ROLLER | 22173-601 |
| 4 | 2 | 181080-000 | BEARING, THRUST WASHER | 22173-601 |
| 5 | 2 | 181108-000 | BEARING, NEEDLE ROLLER | 22173-601 |
| 6 | 4 | 181111-000 | THRUST WASHER | 22173-601 |
| 7 | 1 | 361169-000 | COLLAR, 1/2 IN. ID ONE-PIECE CLAMP | 22173-601 |
| 8 | 1 | 362186-000 | COLLAR, 3/8 IN. ID ONE-PIECE CLAMP | 22173-601 |
| 9 | 1 | 791914-001_10 | MYLAR SCALE, QUADREL LOGO | 22173-601 |
| 10 | 4 | 792248-001 | PILLOW BLOCK | 22173-601 |
| 11 | 1 | 792354-000 | DIGITAL POSITION INDICATOR | 22173-601 |
| 12 | 1 | 792355-000 | DRYLIN RAIL | 22173-601 |
| 13 | 1 | 801080-000 | HANDLE WHEEL, MODIFIED | 22173-601 |
| 14 | 1 | A24077-000 | BRONZE NUT, RH | 22173-601 |
| 15 | 1 | B20045-111 | THREADED ROD | 22173-601 |
| 16 | 1 | B21346-000 | BOTTOM BEARING PLATE | 22173-601 |
| 17 | 1 | B22005-012 | BEARING PLATE | 22173-601 |
| 18 | 1 | C20626-000 | STAND SLED | 22173-601 |
| 19 | 1 | HCS281 | | 22173-601 |
| 20 | 1 | SQN022 | | 22173-601 |

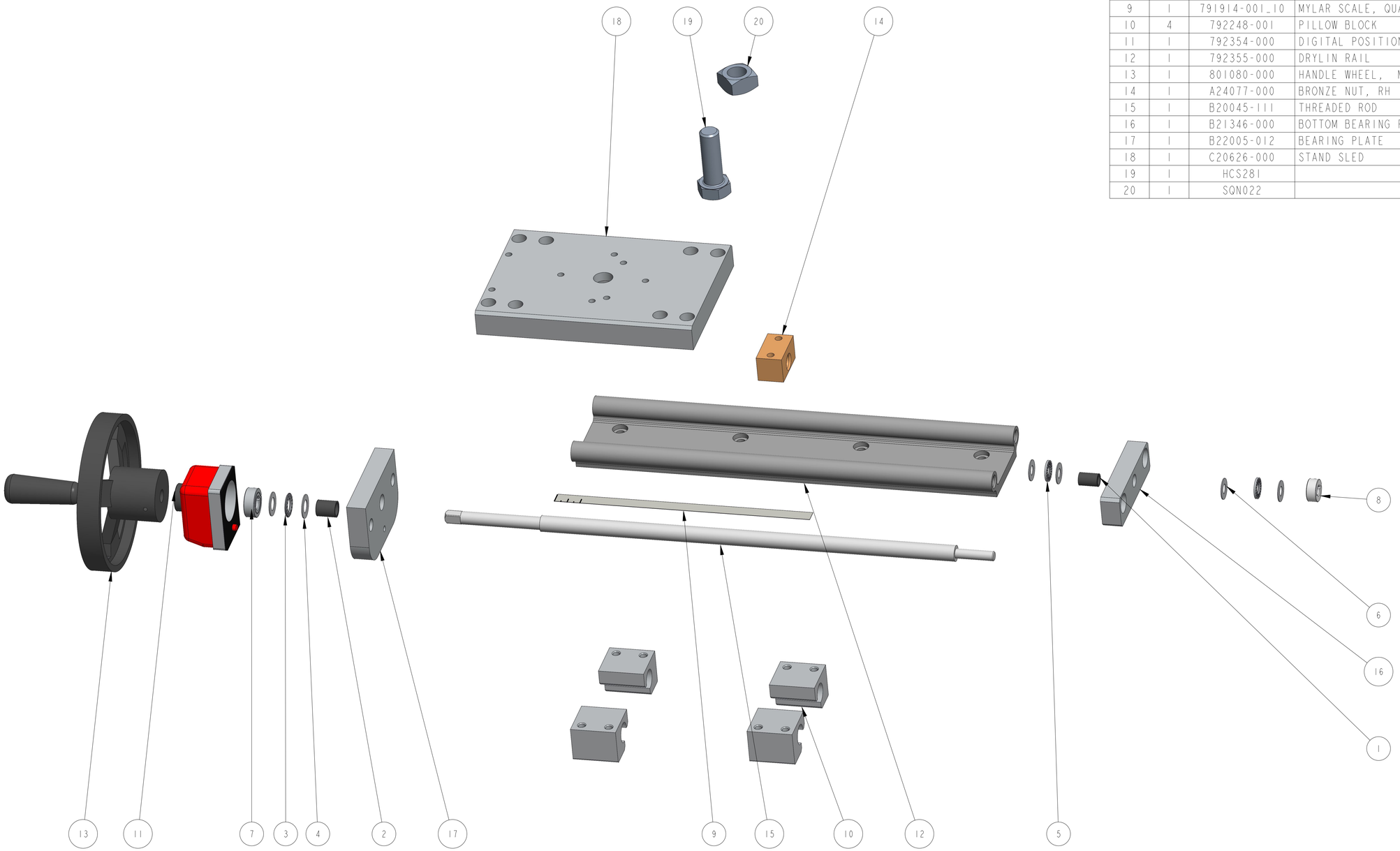


| REV | DATE | DESCRIPTION | BY |
|---|---|---|---|
| A | 3-25-20 | NEW DRAWING | ATT |

THIS IS A PRO-ENGINEER DOCUMENT AND MAY NOT BE MODIFIED MANUALLY

UNLESS OTHERWISE SPECIFIED
DIMENSIONAL TOLERANCE
.X ± .1
.XX ± .01
.XXX ± .005
ANGLES ± 30'

SURFACE FINISH 125
BREAK ALL EDGES .005/.015
CORNER RADIUS .010/.030

QUADREL LABELING SYSTEMS
7670 JENTHER DRIVE
MENTOR, OHIO 44060
(440) 602-4700

SCALE: 1/2
DATE: 3-25-20
DRW BY: ATT
CHK BY: 03/02/24-SEM
APPR BY:

VERTICAL IGUS SLIDE, 17.5"

MAT'L 22173-000

22173-601

SHEET 1 OF 2

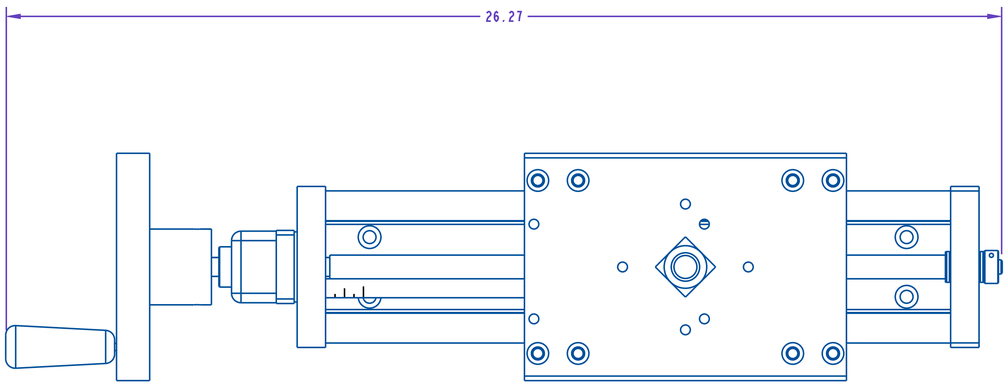


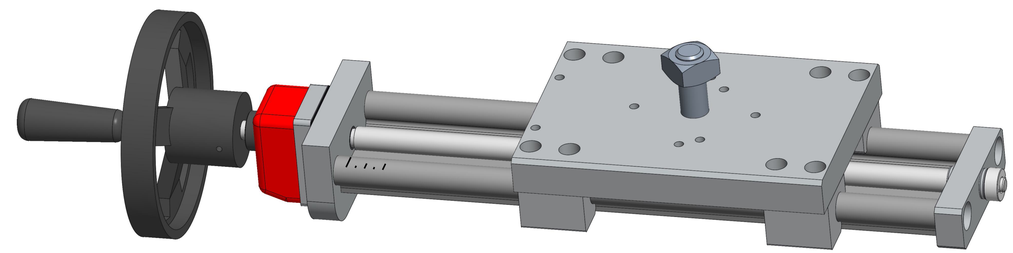

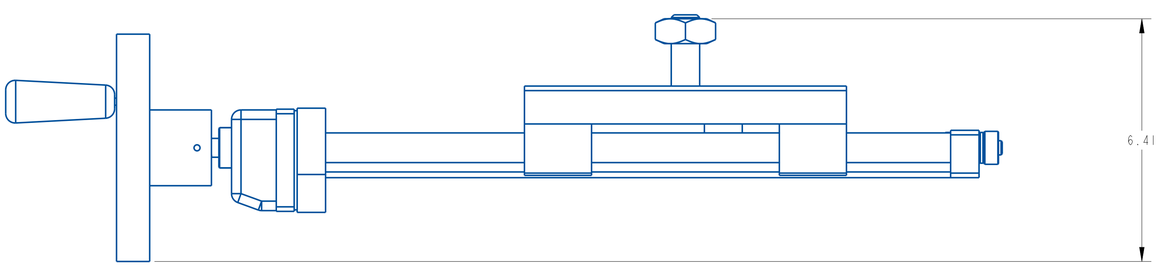


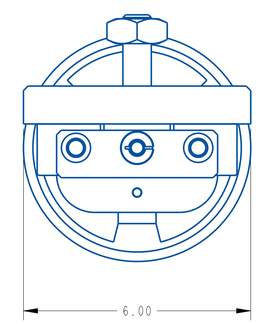


| REV | DATE | DESCRIPTION | BY |
|---|---|---|---|
| A | 3-25-20 | NEW DRAWING | ATT |

THIS IS A PRO-ENGINEER DOCUMENT AND MAY NOT BE MODIFIED MANUALLY

UNLESS OTHERWISE SPECIFIED
DIMENSIONAL TOLERANCE
X ± .1
XX ± .01
XXX ± .005
ANGLES ± 30'
SURFACE FINISH 125
BREAK ALL EDGES .005/.015
CORNER RADIUS .010/.030
ALL ANGLES ARE 90°

QUADREL LABELING SYSTEMS
7670 JENTHER DRIVE
MENTOR, OHIO 44060
(440) 602-4700

SCALE: 1/2
DATE: 3-25-20
DRW BY: ATT
CHK BY: 03/02/24-SEM
APPR BY:

VERTICAL IGUS SLIDE, 17.5"

MAT'L 22173-000

22173-601

SHEET 2 OF 2

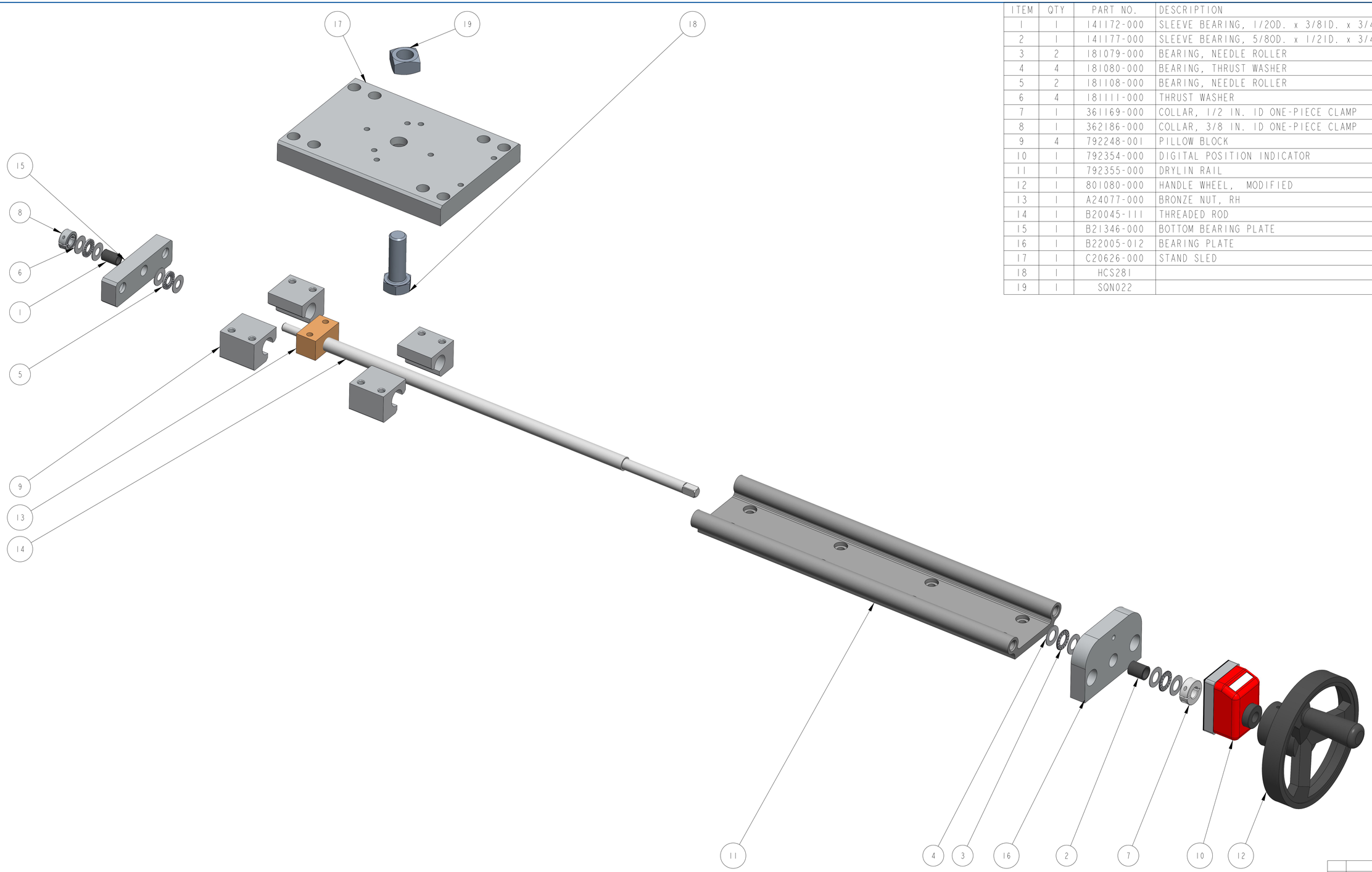


| ITEM | QTY | PART NO. | DESCRIPTION | PARENT ITEM |
|---|---|---|---|---|
| 1 | 1 | 141172-000 | SLEEVE BEARING, 1/2OD. x 3/8ID. x 3/4LNG | 22173H-601 |
| 2 | 1 | 141177-000 | SLEEVE BEARING, 5/8OD. x 1/2ID. x 3/4LNG | 22173H-601 |
| 3 | 2 | 181079-000 | BEARING, NEEDLE ROLLER | 22173H-601 |
| 4 | 4 | 181080-000 | BEARING, THRUST WASHER | 22173H-601 |
| 5 | 2 | 181108-000 | BEARING, NEEDLE ROLLER | 22173H-601 |
| 6 | 4 | 181111-000 | THRUST WASHER | 22173H-601 |
| 7 | 1 | 361169-000 | COLLAR, 1/2 IN. ID ONE-PIECE CLAMP | 22173H-601 |
| 8 | 1 | 362186-000 | COLLAR, 3/8 IN. ID ONE-PIECE CLAMP | 22173H-601 |
| 9 | 4 | 792248-001 | PILLOW BLOCK | 22173H-601 |
| 10 | 1 | 792354-000 | DIGITAL POSITION INDICATOR | 22173H-601 |
| 11 | 1 | 792355-000 | DRYLIN RAIL | 22173H-601 |
| 12 | 1 | 801080-000 | HANDLE WHEEL, MODIFIED | 22173H-601 |
| 13 | 1 | A24077-000 | BRONZE NUT, RH | 22173H-601 |
| 14 | 1 | B20045-111 | THREADED ROD | 22173H-601 |
| 15 | 1 | B21346-000 | BOTTOM BEARING PLATE | 22173H-601 |
| 16 | 1 | B22005-012 | BEARING PLATE | 22173H-601 |
| 17 | 1 | C20626-000 | STAND SLED | 22173H-601 |
| 18 | 1 | HCS281 | | 22173H-601 |
| 19 | 1 | SQN022 | | 22173H-601 |

| REV | DATE | DESCRIPTION | BY |
|---|---|---|---|
| A | 2-24-20 | NEW DRAWING | TJS |

THIS IS A PRO-ENGINEER DOCUMENT AND MAY NOT BE MODIFIED MANUALLY

UNLESS OTHERWISE SPECIFIED
DIMENSIONAL TOLERANCE
.X ± .1
.XX ± .01
.XXX ± .005
ANGLES ± 30'

SURFACE FINISH 125
BREAK ALL EDGES .005/.015
CORNER RADIUS .010/.030

QUADREL LABELING SYSTEMS
7670 JENTHER DRIVE
MENTOR, OHIO 44060
(440) 602-4700

SCALE: 1/2
DATE: 2-24-20
DRW BY: TJS
CHK BY: 03/02/24-SEM
APPR BY:

VERTICAL IGUS SLIDE, 17.5"

MAT'L

22173H-601

SHEET 1 OF 2

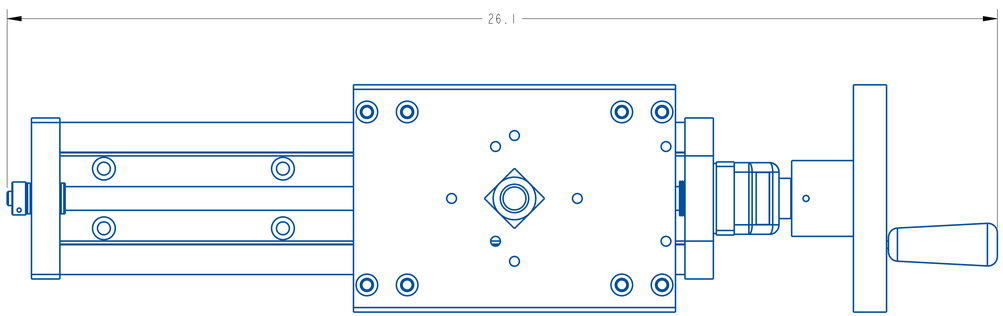


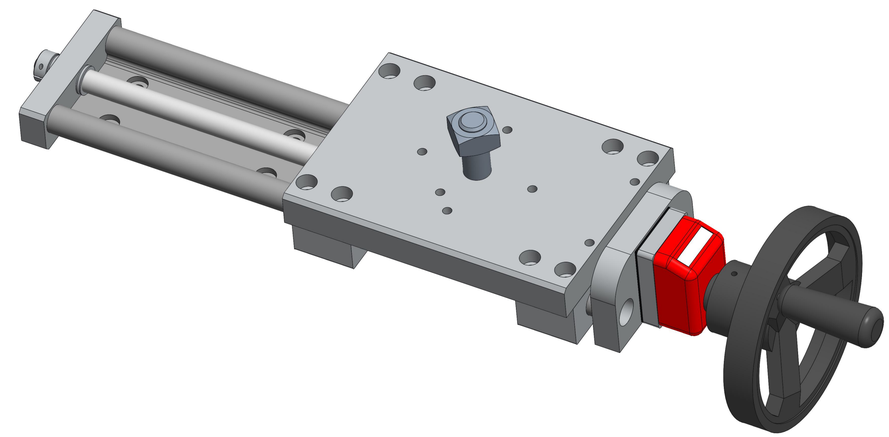

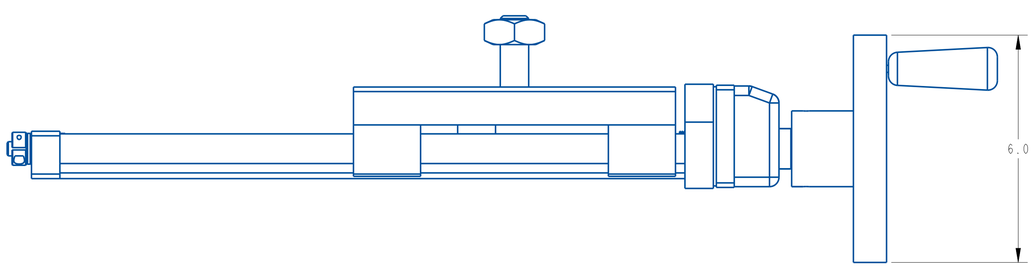


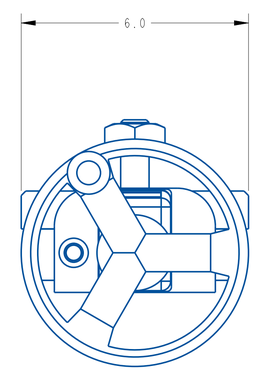


| REV | DATE | DESCRIPTION | BY |
|---|---|---|---|
| A | 2-24-20 | NEW DRAWING | TJS |

THIS IS A PRO-ENGINEER DOCUMENT AND MAY NOT BE MODIFIED MANUALLY

UNLESS OTHERWISE SPECIFIED
DIMENSIONAL TOLERANCE
X ± .1
XX ± .01
XXX ± .005
ANGLES ± 30'
SURFACE FINISH 125
BREAK ALL EDGES .005/.015
CORNER RADIUS .010/.030
ALL ANGLES ARE 90°

QUADREL LABELING SYSTEMS
7670 JENTHER DRIVE
MENTOR, OHIO 44060
(440) 602-4700

SCALE: 1/2
DATE: 2-24-20
DRW BY: TJS
CHK BY: 03/02/24-SEM
APPR BY:

VERTICAL IGUS SLIDE, 17.5"

MAT'L

22173H-601

SHEET 2 OF 2

| ITEM | QTY | PART NO. | DESCRIPTION | PARENT ITEM |
|---|---|---|---|---|
| 1 | 2 | 801850-000 | CLAMPING LEVER | 22620Y-RHH |
| 2 | 2 | B21190-114 | YOKE SIDE PLATE | 22620Y-RHH |
| 3 | 1 | B21555-000 | MTG YOKE BACK PLATE | 22620Y-RHH |

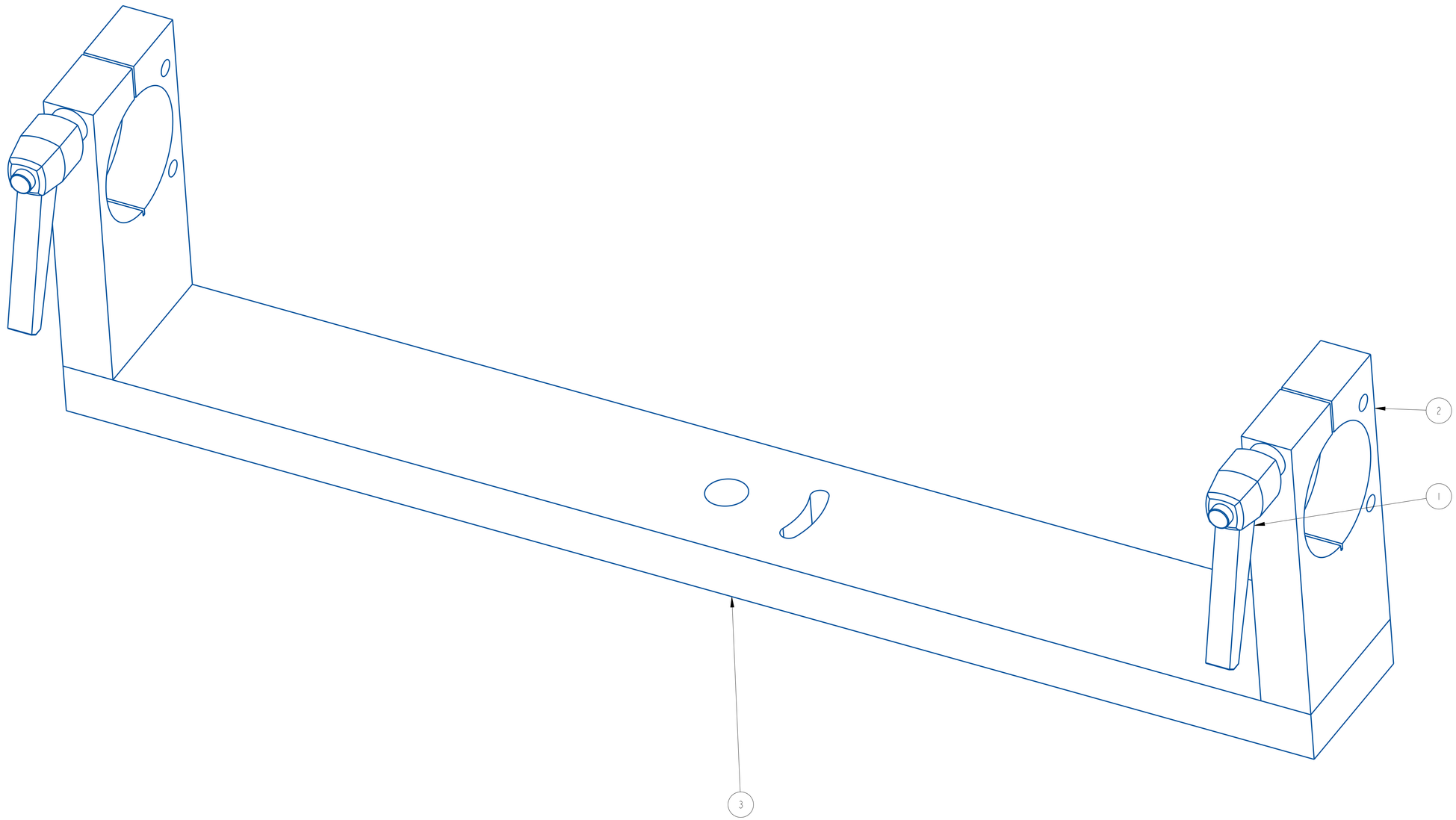


| REV | DATE | DESCRIPTION | BY |
|---|---|---|---|
| A | 11-26-13 | NEW DRAWING | ATT |

THIS IS A PRO-ENGINEER DOCUMENT AND MAY NOT BE MODIFIED MANUALLY

UNLESS OTHERWISE SPECIFIED
DIMENSIONAL TOLERANCE
.X ± .1
.XX ± .01
.XXX ± .005
ANGLES ± 30'

SURFACE FINISH 125
BREAK ALL EDGES .005/.015
CORNER RADIUS .010/.030


QUADREL LABELING SYSTEMS
7670 JENTHER DRIVE
MENTOR, OHIO 44060
(440) 602-4700


SCALE: 1/1
DATE: 11-26-13
DRW BY: ATT
CHK BY: 03/07/2024-SEM
APPR BY:

Q120 YOKE ASSEMBLY

MAT'L

22620Y-RHH

SHEET 1 OF 2

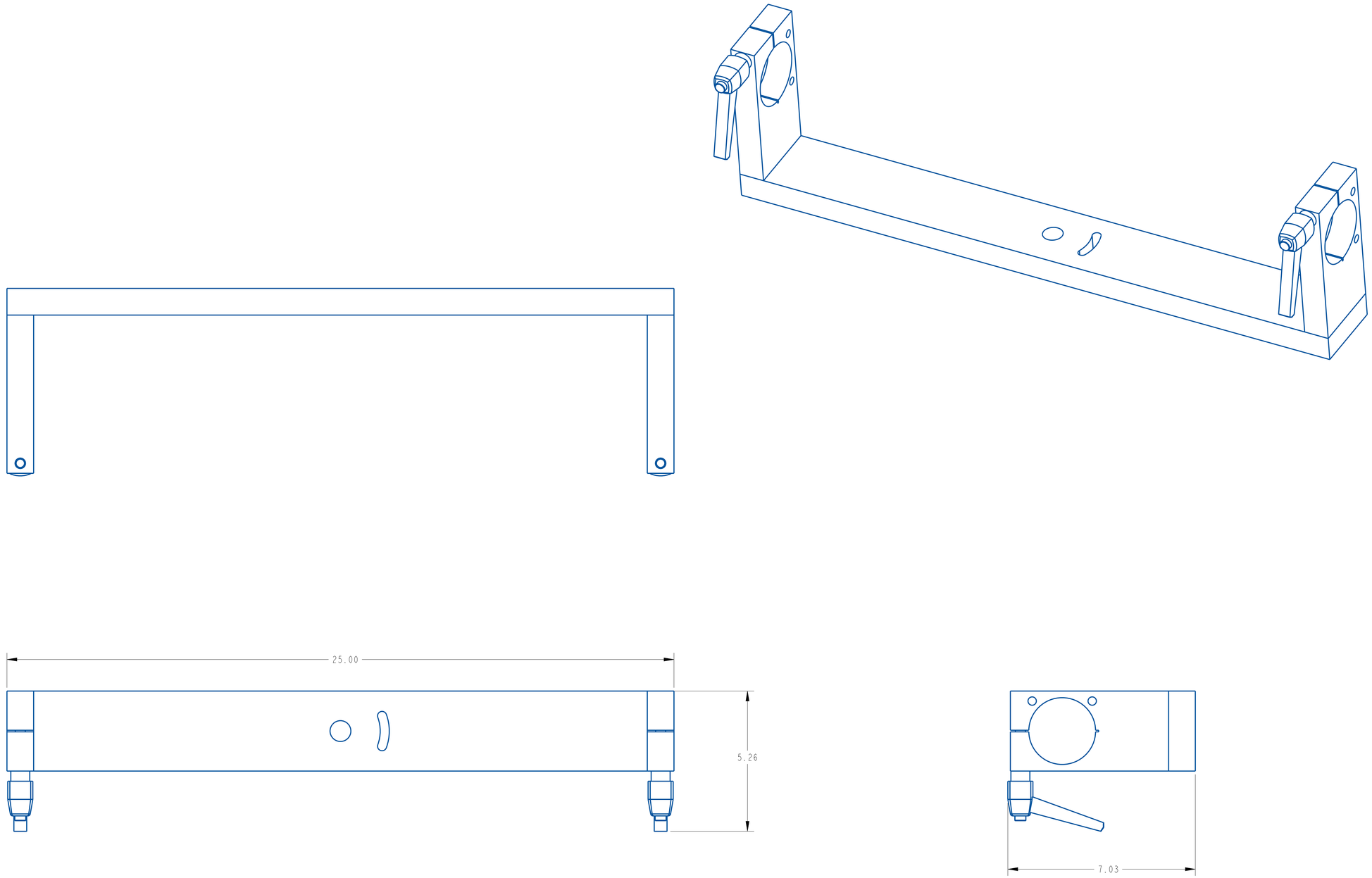


| REV | DATE | DESCRIPTION | BY |
|---|---|---|---|
| A | 11-26-13 | NEW DRAWING | ATT |

THIS IS A PRO-ENGINEER DOCUMENT AND MAY NOT BE MODIFIED MANUALLY

UNLESS OTHERWISE SPECIFIED
DIMENSIONAL TOLERANCE
X ± .1
XX ± .01
XXX ± .005
ANGLES ± 30'
SURFACE FINISH 125
BREAK ALL EDGES .005/.015
CORNER RADIUS .010/.030
ALL ANGLES ARE 90°

QUADREL LABELING SYSTEMS
7670 JENTHER DRIVE
MENTOR, OHIO 44060
(440) 602-4700

SCALE: 1/2
DATE: 11-26-13
DRW BY: ATT
CHK BY:03/07/2024-SEM
APPR BY:

Q120 YOKE ASSEMBLY

MAT'L

22620Y-RHH

SHEET 2 OF 2

## 7.4 PACING WHEEL / BELT ASSEMBLY

### 7.4.1 GENERAL INFORMATION

The pacing wheel/belt are an optional module that is generally placed at the entrance of the conveyor to allow adequate spacing of products as they travel towards the labeling head. The speed of the wheel/belt will vary how much spacing is created between the products. It is controlled by a DC motor and DC drive located in the electrical enclosure.

### 7.4.2 ADJUSTMENTS

The adjustments for both assemblies are fairly straight forward. The pacing wheel assembly has a pivoting in and out adjustment and height adjustment. The pivot in and out adjustment is made by loosening the ratcheting handle on the mount and rotating the assembly as needed.

The vertical adjustment for the pacing wheel is achieved by loosening the collar on the shaft then loosening the ratchet handle and manually pull up or push down as needed. The height is locked in place with the lock collar.  Tighten the ratchet handle when finished.

**CAUTION** **Do not make any adjustments when assembly or conveyor are running.**

The pacing belt assembly has both vertical and horizontal adjustments. To adjust vertically loosen the 2 3/8-16 bolts and pull up on the assembly. To adjust horizontally (in and out) loosen the 2 ratchet handles under the assembly and slide in and out as needed.

**ASSEMBLY TITLE:** **PACING WRAP ASSEMBLY**

**DRAWING NO:** **D21938-000**

**GENERAL FUNCTION:**

The product pacing wrap is offsets each product a variable distance from the preceding product and guarantees adequate product separation.

**SETUP AND ADJUSTMENTS:**

- Adjust the brackets so that the pacing belt slightly presses the product against the back rail. Lock into place using the adjustment knobs.

- The speed of the pacing belt is controlled by a potentiometer located in the remote enclosure mounted on the conveyor riser.

**MAINTENANCE:**

No scheduled maintenance is required for this assembly. Always keep the drive areas free of label flash and debris.

**CAUTION:**

**Before performing any maintenance or cleaning make sure the system is powered down.**

**TROUBLESHOOTING:**

| PROBLEM: | WHAT TO DO: |
|---|---|
| - Product spaced to close | - Reduce the speed of the pacing wheel. |
| - Product spaced too far apart | - Increase the speed of the pacing wheel. |

| ITEM | QTY | PART NO. | DESCRIPTION | PARENT ITEM |
|---|---|---|---|---|
| 1 | 2 | 111064-000 | BEARING, BANDED THRUST BALL | 21978-000 |
| 2 | 2 | 111075-000 | BEARING, BALL | 21978-000 |
| 3 | 2 | 151011-000 | BEARING, THRUST WASHER | 21978-000 |
| 4 | 2 | 151017-000 | BEARING, THRUST WASHER | 21978-000 |
| 5 | 1 | 193366-001 | BELT, WRAP RUFTEX W/V-GUIDE | 21978-000 |
| 6 | 1 | 261823-000 | PLUG BUTTON, 3/4 DIA | 21978-000 |
| 7 | 2 | 262883-000 | PLUG BUTTON | 21978-000 |
| 8 | 1 | 411380-000 | MOTOR, DC | 21978-000 |
| 9 | 1 | A21277-000 | LOWER PLATE (MODULINE WRAP) | 21978-000 |
| 10 | 1 | A21743-000 | IDLER SHAFT | 21978-000 |
| 11 | 1 | A23731-000 | MOTOR MTG. PLATE (MODULINE) | 21978-000 |
| 12 | 2 | A25302-007 | SPACER | 21978-000 |
| 13 | 1 | B20776-000 | DRIVE SHAFT | 21978-000 |
| 14 | 1 | B21200-001 | UPPER PLATE (MODULINE WRAP) | 21978-000 |
| 15 | 1 | B21968-000 | DRIVE ROLL W/GROOVE | 21978-000 |
| 16 | 1 | B21969-000 | IDLER ROLL W/GROOVE | 21978-000 |
| 17 | 1 | D21857-000 | BACK-UP PLATE W/ V-GROOVE SLOT | 21978-000 |

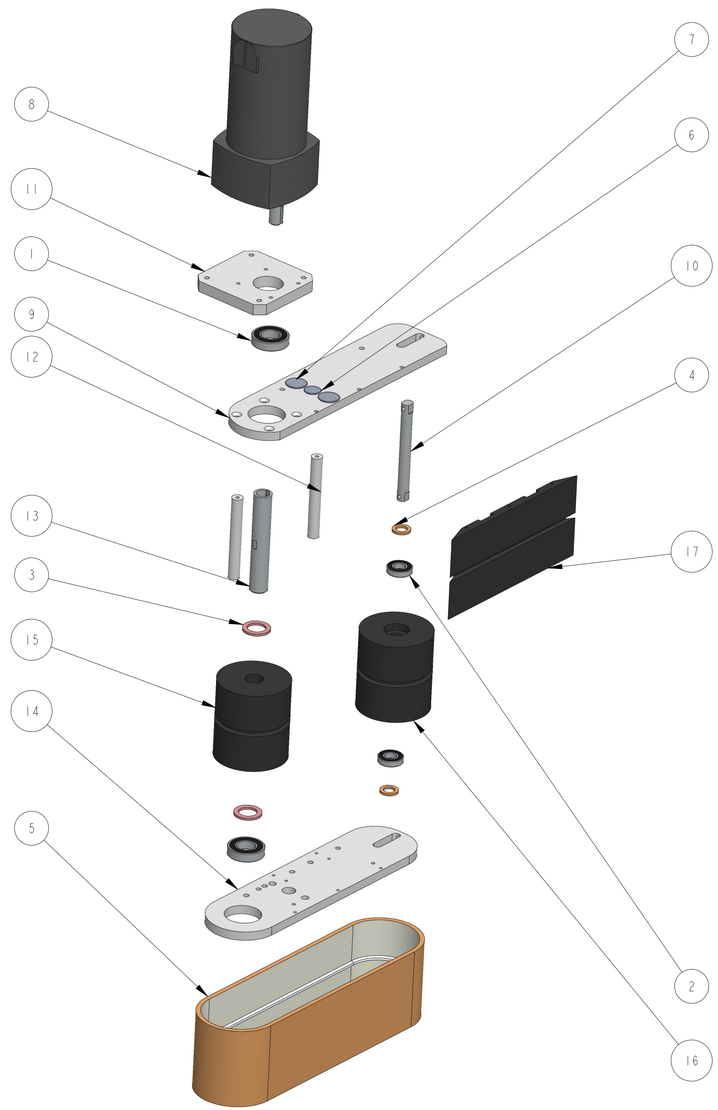


| REV | DATE | DESCRIPTION | BY |
|---|---|---|---|
| A | APR-26-21 | NEW DRAWING | TJS |

THIS IS A PRO-ENGINEER DOCUMENT AND MAY NOT BE MODIFIED MANUALLY

UNLESS OTHERWISE SPECIFIED
DIMENSIONAL TOLERANCE
.X ± .1
.XX ± .01
.XXX ± .005
ANGLES ± 30°

SURFACE FINISH 125
BREAK ALL EDGES .005/.015
CORNER RADIUS .0107.030


QUADREL LABELING SYSTEMS
7670 JENTHER DRIVE
MENTOR, OHIO 44060
(440) 602-4700


SCALE: 1/4
DATE: APR-26-21
DRW BY: TJS
CHK BY: 03/12/2024-SEM
APPR BY:

4 x 12 PACING WRAP

MAT'L

21978-000

SHEET 1 OF 2

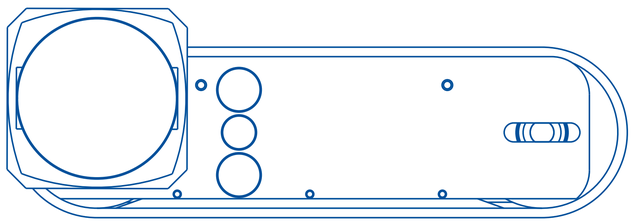

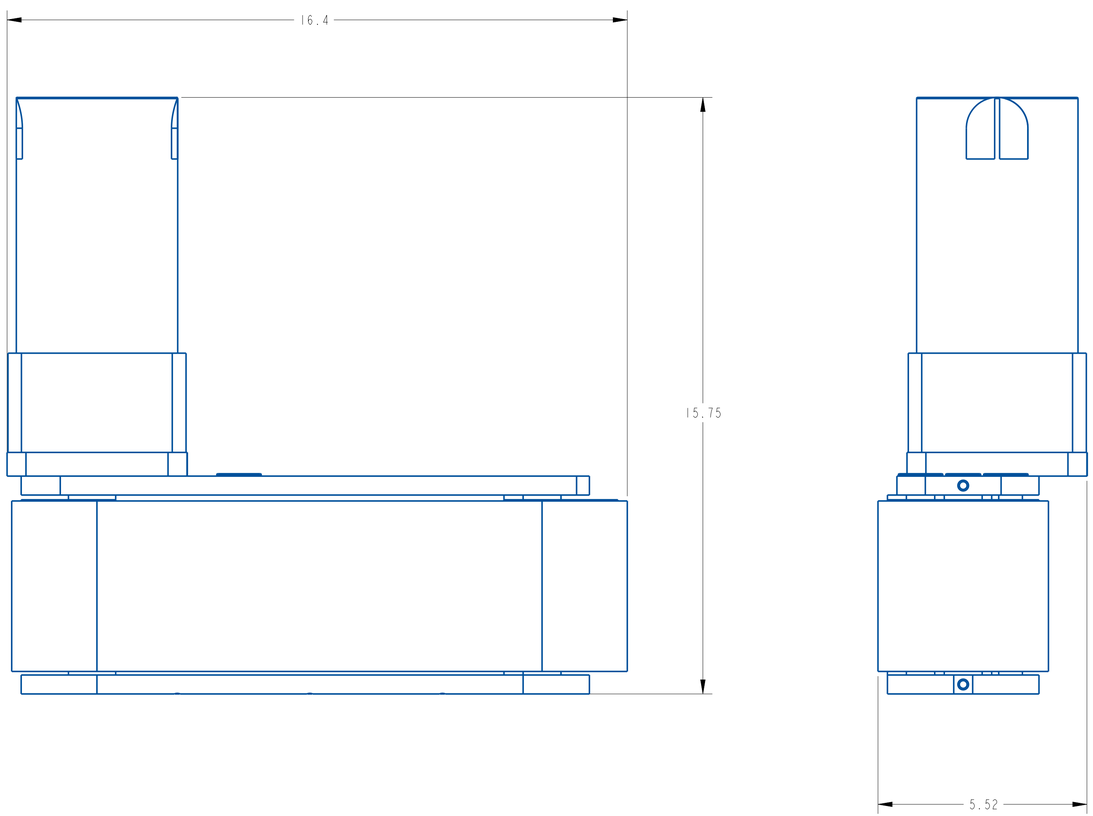


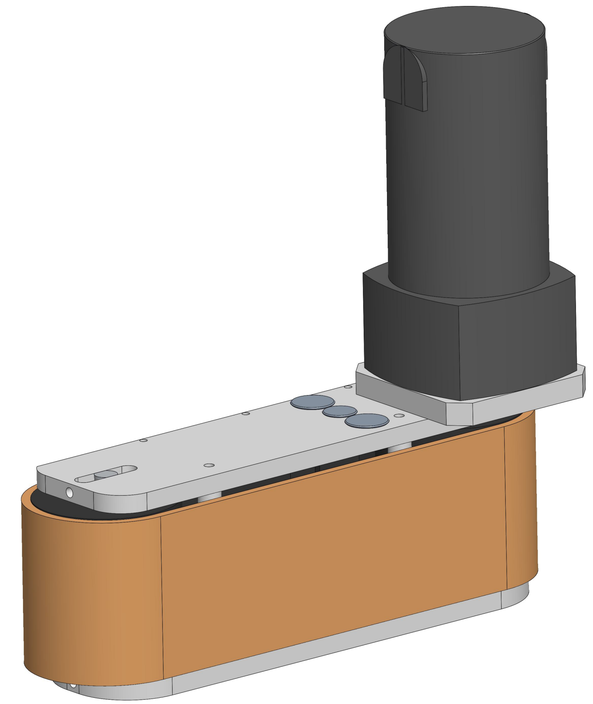

| REV | DATE | DESCRIPTION | BY |
|---|---|---|---|
| A | Apr-26-21 | NEW DRAWING | TJS |

THIS IS A PRO-ENGINEER DOCUMENT AND MAY NOT BE MODIFIED MANUALLY

UNLESS OTHERWISE SPECIFIED
DIMENSIONAL TOLERANCE
X ± .1
XX ± .01
XXX ± .005
ANGLES ± 30'
SURFACE FINISH 125
BREAK ALL EDGES .005/.015
CORNER RADIUS .010/.030
ALL ANGLES ARE 90°

QUADREL LABELING SYSTEMS
7670 JENTHER DRIVE
MENTOR, OHIO 44060
(440) 602-4700

SCALE: 1/2
DATE: Apr-26-21
DRW BY: TJS
CHK BY:03/12/2024-SEM
APPR BY:

4 x 12 PACING WRAP

MAT'L

21978-000

SHEET 2 OF 2

| ITEM | QTY | PART NO. | DESCRIPTION | PARENT ITEM |
|---|---|---|---|---|
| 1 | 1 | A23798-007 | PACING BELT ADAPTER PLATE | 22843-000 |
| 2 | 2 | A24625-000 | KEY | 22843-000 |

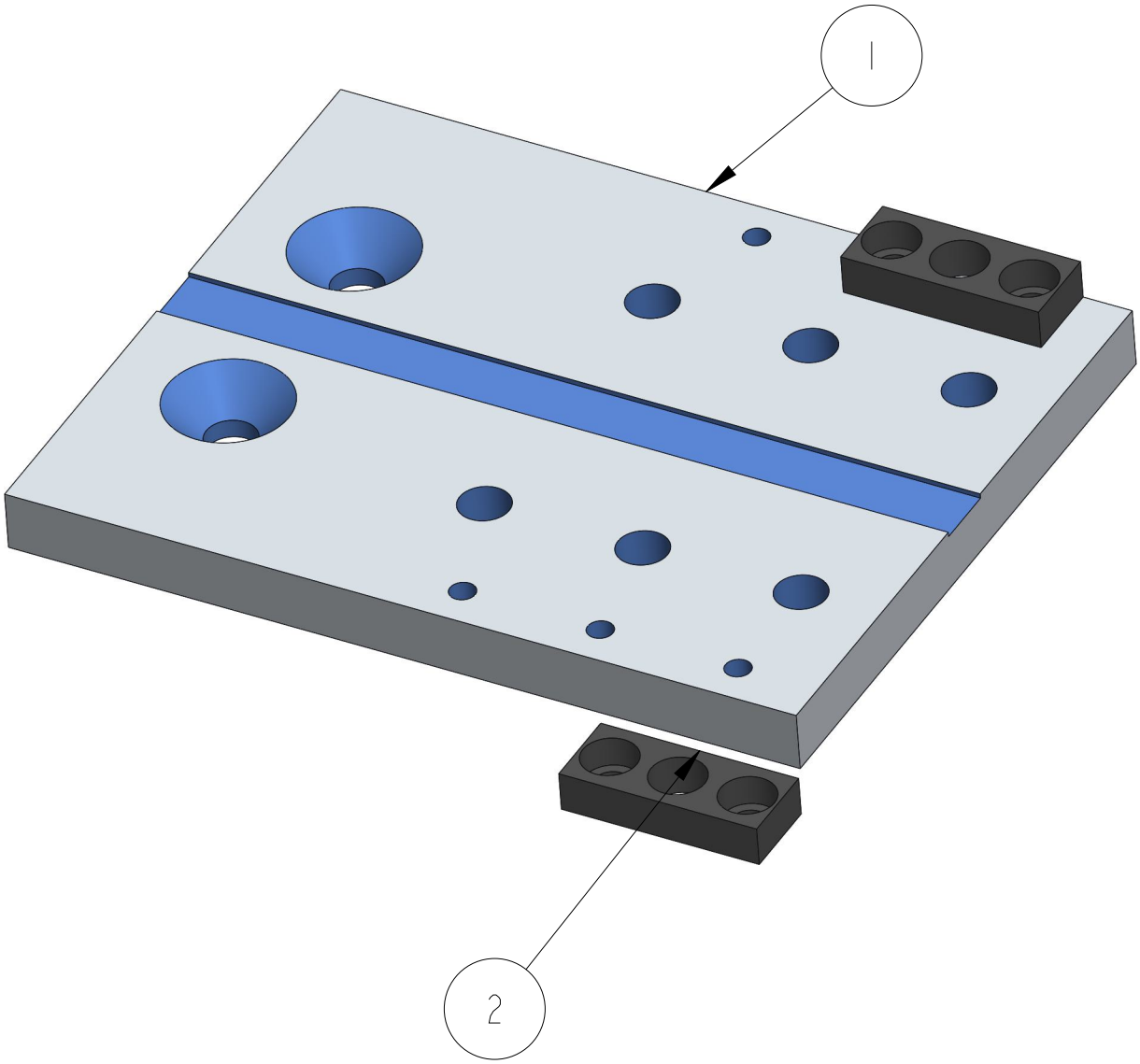


| REV | DATE | DESCRIPTION | BY |
|---|---|---|---|
| A | 09-APR-2024 | NEW DRAWING | CRT |

**THIS IS A PRO-ENGINEER DOCUMENT AND MAY NOT BE MODIFIED MANUALLY**

UNLESS OTHERWISE SPECIFIED
DIMENSIONAL TOLERANCE

.X ± .1
.XX ± .01
.XXX ± .005
ANGLES ± 30′

SURFACE FINISH 125
BREAK ALL EDGES .005/.015
CORNER RADIUS .010/.030


**QUADREL LABELING SYSTEMS**
7670 JENTHER DRIVE
MENTOR, OHIO 44060
(440) 602-4700


SCALE: 1.000
DATE: 09-APR-2024
DRW BY: CRT
CHK BY: 05/17/2024-SEM
APPR BY:

ASSEMBLY, PACING WRAP ADAPTOR

MAT′L

A23798-007

| ITEM | QTY | PART NO. | DESCRIPTION | PARENT ITEM |
|---|---|---|---|---|
| 1 | 2 | 801805-000 | CLAMPING LEVER | 22267-003 |
| 2 | 2 | A20876-000 | RETAINER BLOCK | 22267-003 |
| 3 | 1 | A21031-002 | CONVEYOR MOUNTING PLATE | 22267-003 |
| 4 | 2 | A21367-000 | RETAINER BLOCK | 22267-003 |
| 5 | 1 | B21836-000 | ESCAPEMENT MOUNTING PLATE | 22267-003 |
| 6 | 1 | B21837-000 | ESCAPEMENT GUSSET | 22267-003 |
| 7 | 1 | B21838-000 | ESCAPEMENT MOUNTING PLATE | 22267-003 |

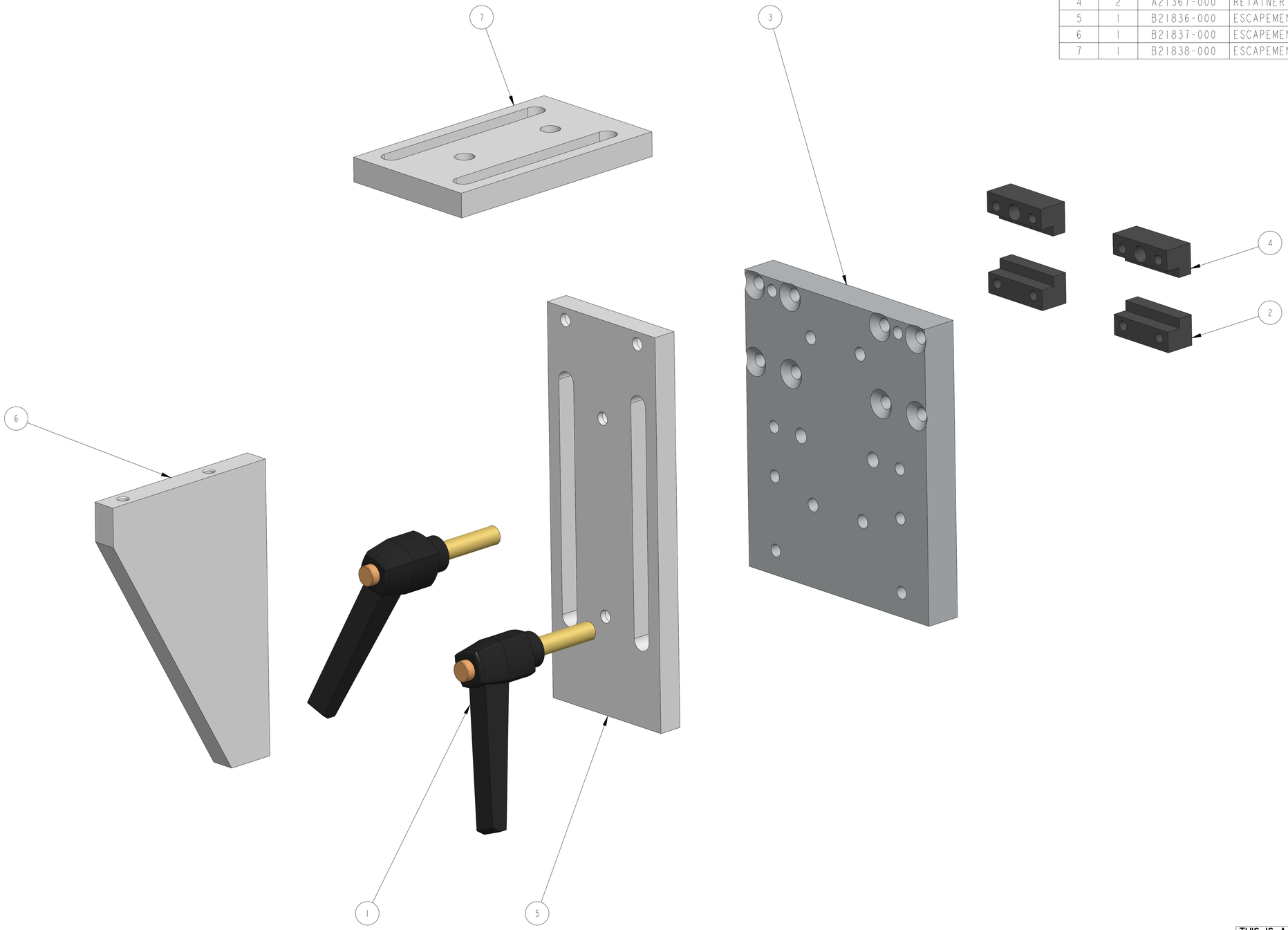


| REV | DATE | DESCRIPTION | BY |
|---|---|---|---|
| A | 11/14/23 | NEW DRAWING | SEM |

THIS IS A PRO-ENGINEER DOCUMENT AND MAY NOT BE MODIFIED MANUALLY

UNLESS OTHERWISE SPECIFIED
DIMENSIONAL TOLERANCE
X ± .1
XX ± .01
XXX ± .005
ANGLES ± 30°

SURFACE FINISH 125
BREAK ALL EDGES .005/.015
CORNER RADIUS .010/.030


QUADREL LABELING SYSTEMS
7670 JENTHER DRIVE
MENTOR, OHIO 44060
(440) 602-4700


SCALE: 1/1
DATE: 11/14/23
DRW BY: SEM
CHK BY: 04/24/2024-SEM
APPR BY:

TILT WRAP , RAIL MOUNT

MAT'L 22267-003

22267-003

SHEET 1 OF 2

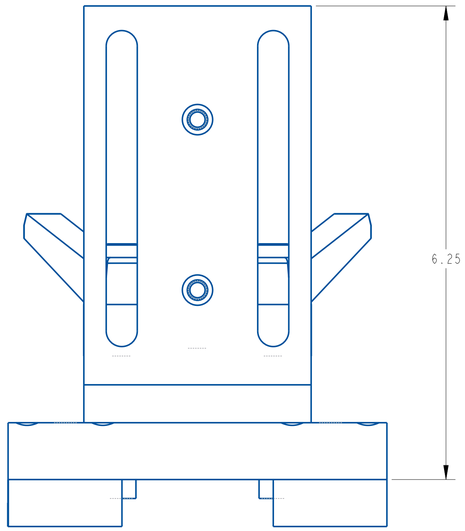


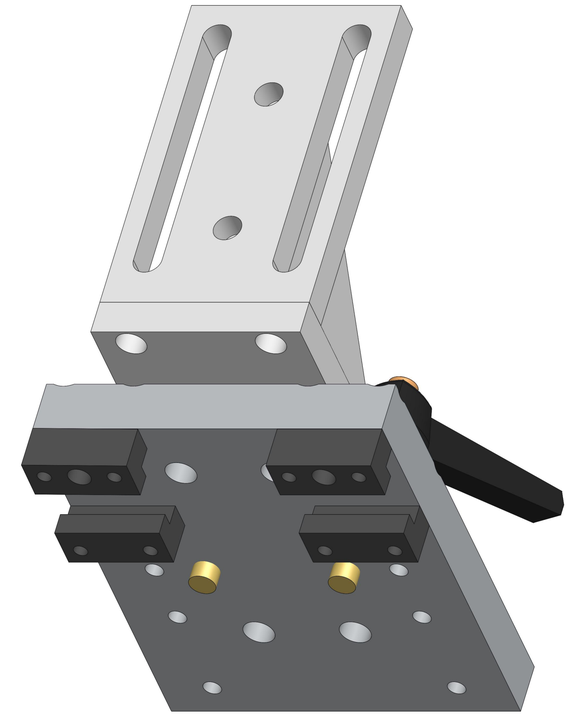

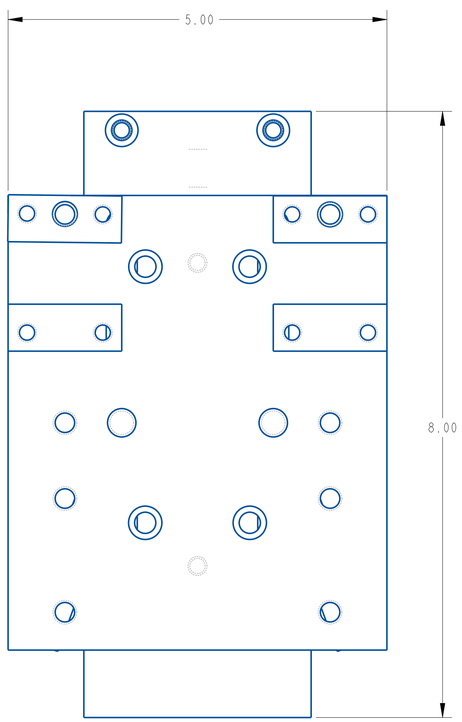


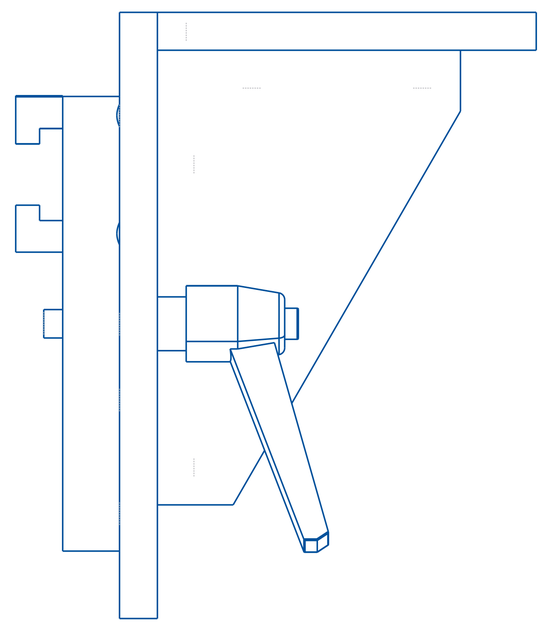

SHEET 2 OF 2

| REV | DATE | DESCRIPTION | BY |
|---|---|---|---|
| A | 11/14/23 | NEW DRAWING | SEM |

THIS IS A PRO-ENGINEER DOCUMENT AND MAY NOT BE MODIFIED MANUALLY

UNLESS OTHERWISE SPECIFIED
DIMENSIONAL TOLERANCE
X ± .1
XX ± .01
XXX ± .005
ANGLES ± 30'
SURFACE FINISH 125
BREAK ALL EDGES .005/.015
CORNER RADIUS .010/.030
ALL ANGLES ARE 90°

QUADREL LABELING SYSTEMS
7670 JENTHER DRIVE
MENTOR, OHIO 44060
(440) 602-4700

| | |
|---|---|
| SCALE: | 1/1 |
| DATE: | 11/14/23 |
| DRW BY: | SEM |
| CHK BY: | &CREO_CHK |
| APPR BY: | |

TILT WRAP , RAIL MOUNT

MAT'L 22267-003

22267-003

## 7.5 WRAP STATION ASSEMBLY

### 7.5.1 GENERAL INFORMATION

The wrap station is generally positioned near the labeler and is made up of a belt/roller assembly activated by a DC motor (with encoder), and AC motor, or servo motor coupled to a gear box and adjusting plate. The wrap station paired with a foam back plate assembly is used for cylindrical products to ensure impression 360 degrees around the container. There are two wrap styles depending on your specific application. A triangle wrap station (pictured on the left) is used primarily in “flag and wrap” applications where the wrap station is positioned after the top hold down. Our direct wrap or rectangle wrap station (pictured on the right) is positioned directly after the peel plate. This wrap station comes with a dc motor with an encoder to ensure absolute synchrony with the labeling head.

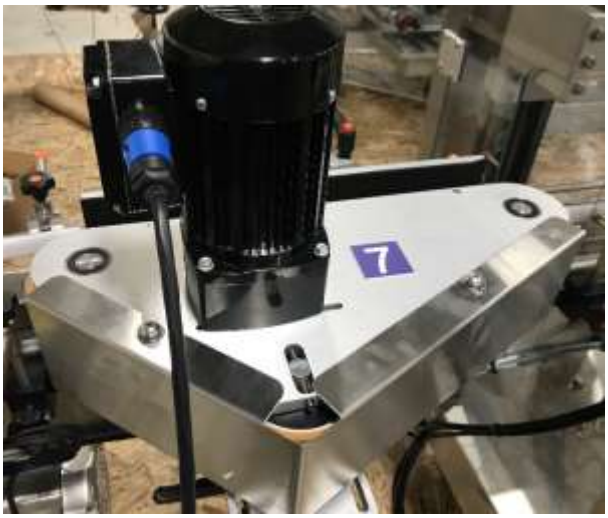


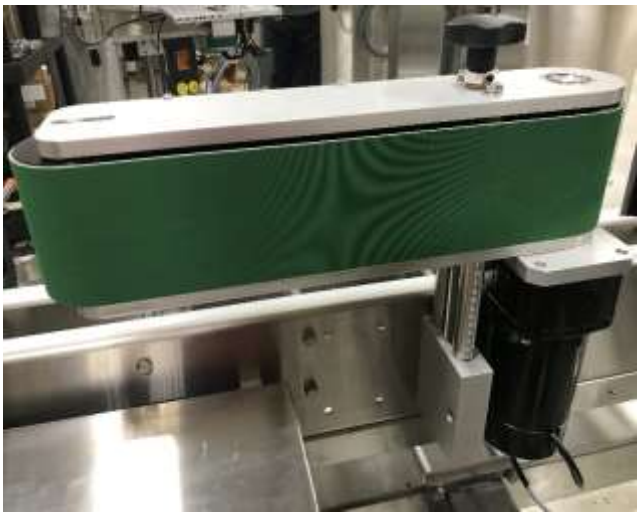

## 7.5.2 ADJUSTMENTS

Depending on the height of your product and placment of your label you may need to adjust the height of the wrap station. Adjusting the hieght on your wrap station is very simple. On a triangle wrap station rotate the handwheel counter clockwise or clockwise to raise and lower the wrap station.

On a rectangle wrap station locate the handle on the mount for the wrap station. loosen the ratchet handle, then simply turn the knob on top of the wrap station clockwise and counter clockwise to raise and lower the wrap station. This is the only adjustment for the rectangle wrap station on this mount.

The triangle wrap station has the ability to travel in and out. This adjustment is used in applications with skinnier products, or a cituation where you need to move the wrap out of the way. To achieve this adjustment loosen both ratchet handles und the wrap station. Tighten when in place.

**CAUTION** **Do not make this adjustment when the wrap station is running.**

In more difficult applications such as tapered containers you may need to adjust the tilt of the wrap station to match the products taper (If the taper is too great other methods are used). To adjust the tilt or to square the wrap station to the conveyor or container locate the 4 set screws on the wrap mount loosen the jam nuts and tighten or loosen the set screws to tilt the wrap station as desired.

**ASSEMBLY TITLE:** **WRAP ASSEMBLY**

**DRAWING:** **D22761-000**

**GENERAL FUNCTION:**

The wrap station is used in conjunction with a single labeling head to apply a label around a cylindrical product. The wrap station length will vary with respect to the maximum length of label being applied.

**SET UP AND ADJUSTMENTS:**

The wrap station is attached to mounting blocks which clamp to mounting rails affixed to the conveyor side plate. The wrap station can be moved by loosening the locking levers holding the wrap station in place. Position as needed and retighten locking levers.

Set the speed of the wrap station with the wrap ratio setting.

The final wrap speed should be set from 1.5 to 2 times (1½-2x) the rate of the conveyor. All line compensation systems will automatically adjust the labeling head speed with respect to the speed of the wrap station.

**MAINTENANCE:**

Keep the wrap belt free of label adhesive and debris. This will prevent jamming and web tears.

Periodically check belt tension. Use the setscrew adjustment at each end to control belt tension.

**CAUTION:**

**Before performing any maintenance or cleaning make sure the system is powered down.**

**TROUBLESHOOTING**:

| PROBLEM | WHAT TO DO |
|---|---|
| - Belt not fully engaged | Increase tension on belt by adjusting tensioner set screws. |
| - Wrap station not feeding the label correctly | Adjust wrap station inward. |
| - Speed set incorrectly | Reset speed as necessary. |
| - Belt Jam | Speed set incorrectly, reset speed as necessary. |
| - Tension too stiff | Relieve tension. |

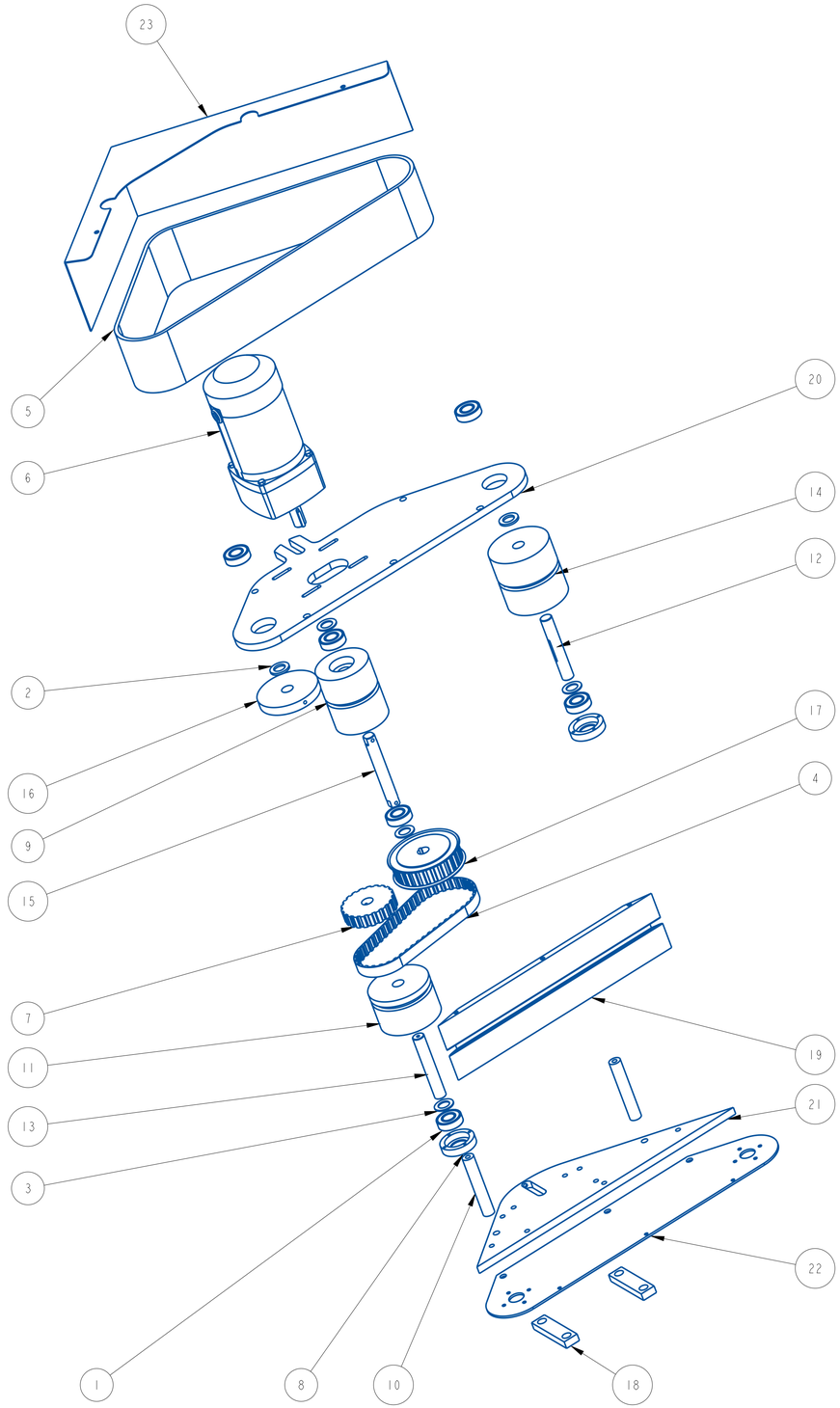


| ITEM | QTY | PART NO. | DESCRIPTION | PARENT ITEM |
|---|---|---|---|---|
| 1 | 6 | 111052-000 | BEARING | 22579-000L |
| 2 | 2 | 151001-000 | BEARING, THRUST WASHER | 22579-000L |
| 3 | 4 | 151006-000 | BEARING, THRUST WASHER | 22579-000L |
| 4 | 1 | 191660-000 | BELT, TIMING, 1/2P | 22579-000L |
| 5 | 1 | 193247-002 | BELT, WRAP, 4 X 18 w/K6 V-GUIDE | 22579-000L |
| 6 | 1 | 412173-000 | GEARMOTOR; 3/8 HP 170RPM 3PH AC | 22579-000L |
| 7 | 1 | A21035-000 | DRIVEN ROLL PULLEY | 22579-000L |
| 8 | 2 | A21037-000 | BEARING PLATE | 22579-000L |
| 9 | 1 | A21054-004 | IDLER ROLLER | 22579-000L |
| 10 | 2 | A21184-003 | SPACER | 22579-000L |
| 11 | 1 | A21185-000 | DRIVE ROLL | 22579-000L |
| 12 | 1 | A21188-000 | IDLER SHAFT | 22579-000L |
| 13 | 1 | A21189-000 | DRIVE SHAFT | 22579-000L |
| 14 | 1 | A21190-000 | IDLER ROLLER | 22579-000L |
| 15 | 1 | A21555-003 | TAKE-UP SHAFT | 22579-000L |
| 16 | 1 | A21556-000 | DRIVE ROLL | 22579-000L |
| 17 | 1 | A21585-000 | MOTOR DRIVE PULLEY | 22579-000L |
| 18 | 2 | A23489-000 | GUIDE | 22579-000L |
| 19 | 1 | B20492-000 | BACK-UP PLATE | 22579-000L |
| 20 | 1 | C20269-003 | 4X18 WRAP TOP PLATE MODIFICATION | 22579-000L |
| 21 | 1 | C20270-000 | 18" WRAP PLATE - BOTTOM | 22579-000L |
| 22 | 1 | C20271-003 | 18" WRAP PLATE - BOTTOM | 22579-000L |
| 23 | 1 | C21453-418L | WRAP GUARD | 22579-000L |

| REV | DATE | DESCRIPTION | BY |
|---|---|---|---|
| A | Mar-18-21 | NEW DRAWING | TJS |

THIS IS A PRO-ENGINEER DOCUMENT AND MAY NOT BE MODIFIED MANUALLY

UNLESS OTHERWISE SPECIFIED
DIMENSIONAL TOLERANCE
.X ± .1
.XX ± .01
.XXX ± .005
ANGLES ± 30'

SURFACE FINISH 125
BREAK ALL EDGES .005/.015
CORNER RADIUS .010/.030

QUADREL LABELING SYSTEMS
7670 JENTHER DRIVE
MENTOR, OHIO 44060
(440) 602-4700

SCALE: 1/32
DATE: Mar-18-21
DRW BY: TJS
CHK BY: 09/17/2024-SEM
APPR BY:

VERS. 4X18 FLAG AND WRAP AC

MAT'L

22579-000L

SHEET 1 OF 2

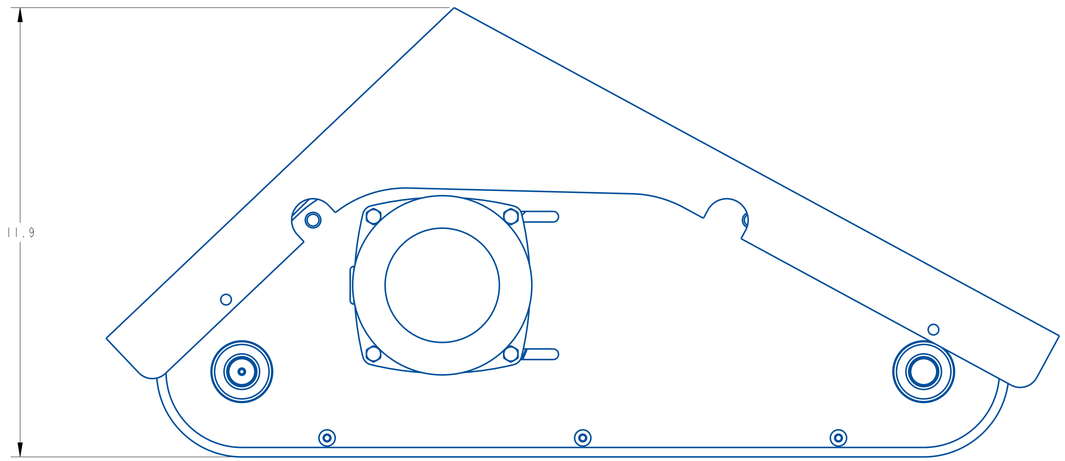


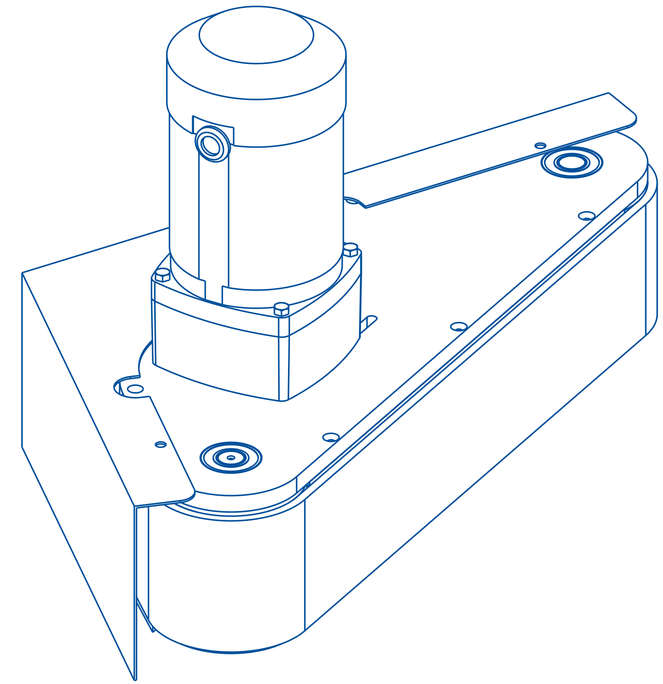

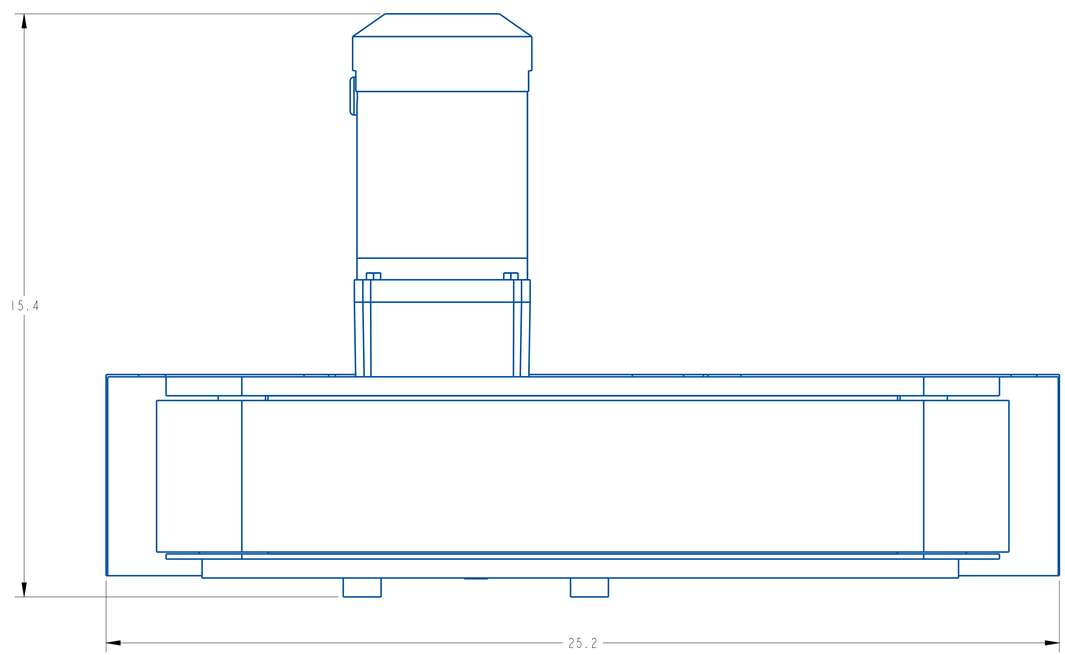


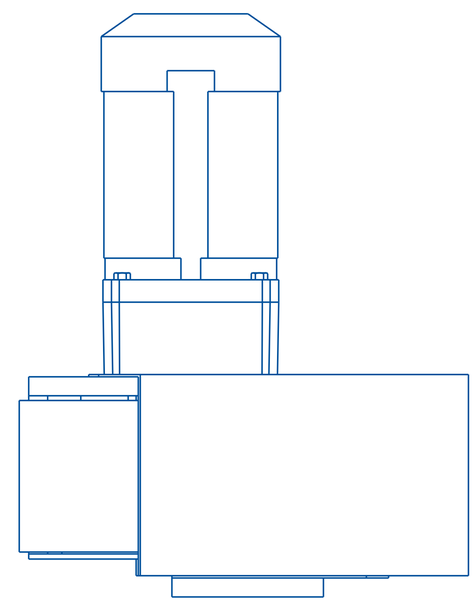

| REV | DATE | DESCRIPTION | BY |
|---|---|---|---|
| A | Mar-18-21 | NEW DRAWING | TJS |

THIS IS A PRO-ENGINEER DOCUMENT AND MAY NOT BE MODIFIED MANUALLY

UNLESS OTHERWISE SPECIFIED
DIMENSIONAL TOLERANCE
X ± .1
XX ± .01
XXX ± .005
ANGLES ± 30'

SURFACE FINISH 125
BREAK ALL EDGES .005/.015
CORNER RADIUS .010/.030
ALL ANGLES ARE 90°

QUADREL LABELING SYSTEMS
7670 JENTHER DRIVE
MENTOR, OHIO 44060
(440) 602-4700

SCALE: 1/2
DATE: Mar-18-21
DRW BY: TJS
CHK BY:09/17/2024-SEM
APPR BY:

VERS. 4X18 FLAG AND WRAP AC

MAT'L

22579-000L

SHEET 2 OF 2

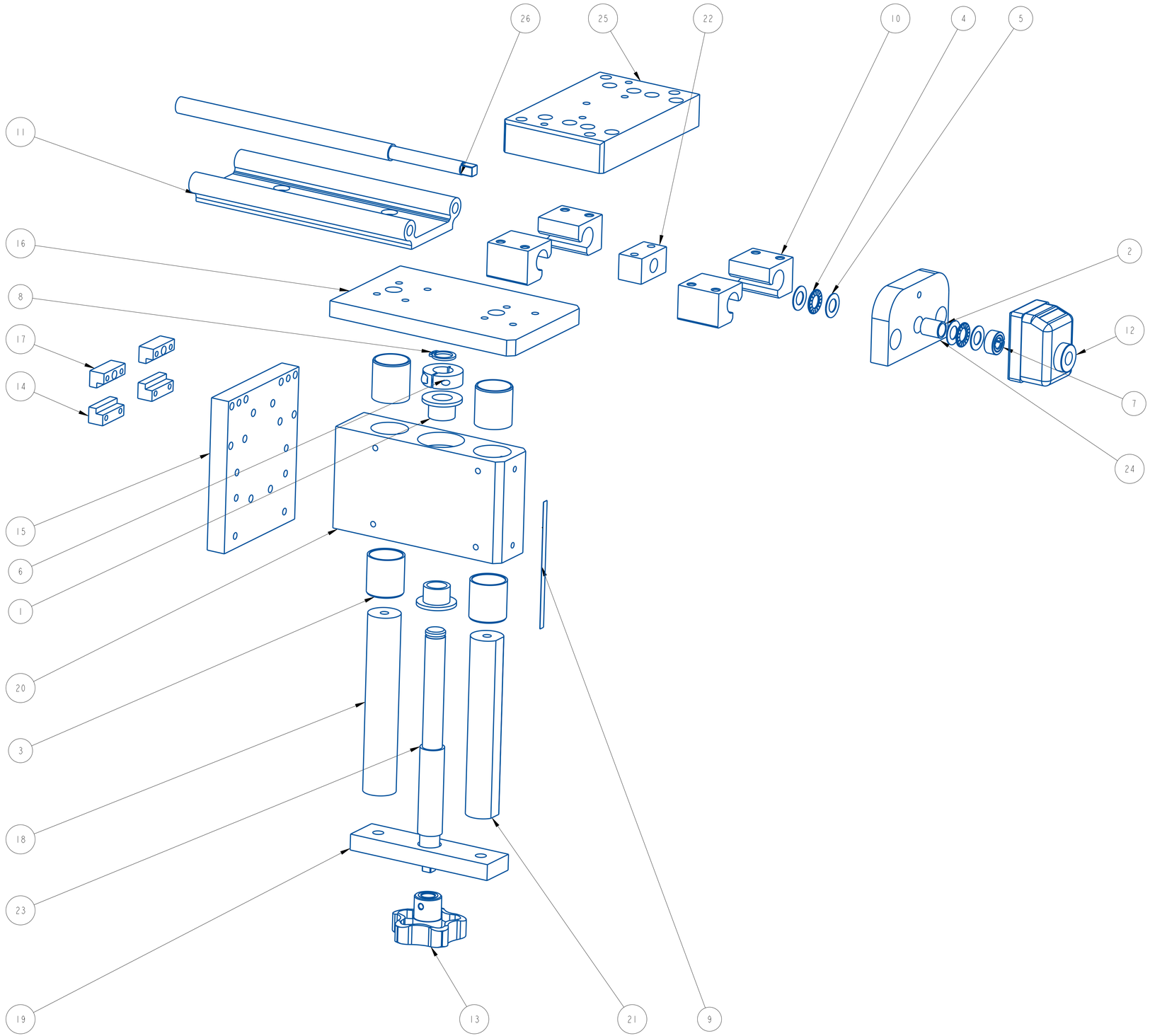


| ITEM | QTY | PART NO. | DESCRIPTION | PARENT ITEM |
|---|---|---|---|---|
| 1 | 2 | 131076-000 | BEARING, FLANGED | 20306-700 |
| 2 | 1 | 141177-000 | SLEEVE BEARING, 5/8OD. x 1/2ID. x 3/4LNG | 20306-700 |
| 3 | 4 | 141193-000 | SLEEVE BEARING | 20306-700 |
| 4 | 2 | 181079-000 | BEARING, NEEDLE ROLLER | 20306-700 |
| 5 | 4 | 181080-000 | BEARING, THRUST WASHER | 20306-700 |
| 6 | 1 | 361183-000 | COLLAR, 3/4 ID ONE PIECE- S.S. | 20306-700 |
| 7 | 1 | 362186-000 | COLLAR, 3/8 IN. ID ONE-PIECE CLAMP | 20306-700 |
| 8 | 1 | 791790-000 | EXTERNAL RETAINING RING | 20306-700 |
| 9 | 1 | 791914-002_05 | MYLAR SCALE, QUADREL LOGO | 20306-700 |
| 10 | 4 | 792248-001 | PILLOW BLOCK | 20306-700 |
| 11 | 1 | 792275-000 | DRYLIN RAIL | 20306-700 |
| 12 | 1 | 792354-000 | DIGITAL POSITION INDICATOR | 20306-700 |
| 13 | 1 | 801332-000 | LOBE KNOB W/ ORANGE CENTER | 20306-700 |
| 14 | 2 | A20876-000 | RETAINER BLOCK | 20306-700 |
| 15 | 1 | A21031-000 | CONVEYOR MOUNTING PLATE | 20306-700 |
| 16 | 1 | A21034-700 | ADJUSTMENT ROD MOUNTING PLATE | 20306-700 |
| 17 | 2 | A21367-000 | RETAINER BLOCK | 20306-700 |
| 18 | 1 | A21552-102 | GUIDE ROD | 20306-700 |
| 19 | 1 | A21553-000 | BEARING PLATE | 20306-700 |
| 20 | 1 | A21588-100 | BEARING MOUNTING BLOCK | 20306-700 |
| 21 | 1 | A23903-102 | GUIDE ROD WITH FLAT | 20306-700 |
| 22 | 1 | A25120-000 | BRONZE NUT, RH | 20306-700 |
| 23 | 1 | B21299-102 | VERTICAL ADJ. SCREW | 20306-700 |
| 24 | 1 | B22005-001 | BEARING PLATE | 20306-700 |
| 25 | 1 | C20949-700 | IGUS WRAP MOUNTING SLED | 20306-700 |
| 26 | 1 | C20977-663 | THREADED ROD, RH | 20306-700 |

| REV | DATE | DESCRIPTION | BY |
|---|---|---|---|
| B | Sep-29-23 | CHANGED THD ROD AND NUT TO RH | CRT |
| A | 3-11-19 | NEW DRAWING | TJS |

THIS IS A PRO-ENGINEER DOCUMENT AND MAY NOT BE MODIFIED MANUALLY

UNLESS OTHERWISE SPECIFIED
DIMENSIONAL TOLERANCE
.X ± .1
.XX ± .01
.XXX ± .005
ANGLES ± 30'

SURFACE FINISH 125
BREAK ALL EDGES .005/.015
CORNER RADIUS .010/.030

QUADREL LABELING SYSTEMS
7670 JENTHER DRIVE
MENTOR, OHIO 44060
(440) 602-4700

SCALE: 1/2
DATE: 3-11-19
DRW BY: TJS
CHK BY: 03/09/2024-SEM
APPR BY:

VERSALINE WRAP MOUNTING ASSEMBLY

MAT'L

20306-700

SHEET 1 OF 2

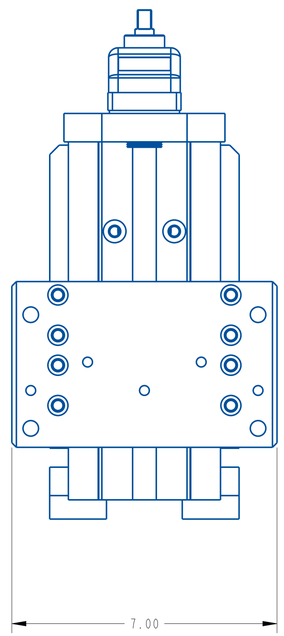


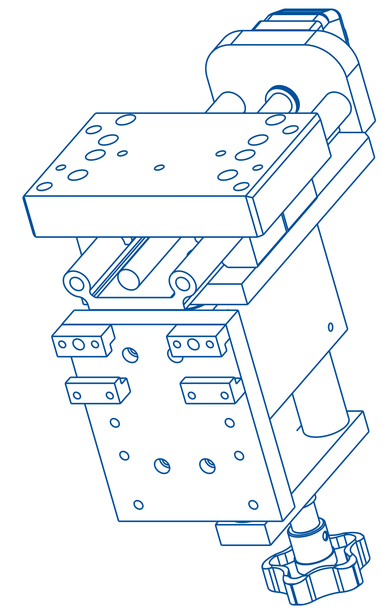

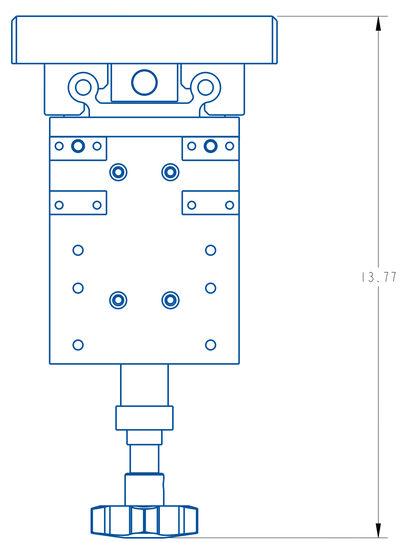


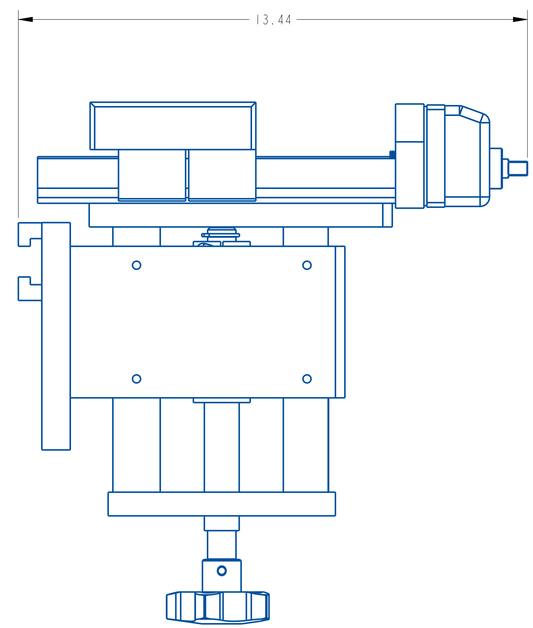


| REV | DATE | DESCRIPTION | BY |
|---|---|---|---|
| B | Sep-29-23 | CHANGED THD RED AND NOT TO RH | CRT |
| A | Jan-03-18 | NEW DRAWING | CRT |

THIS IS A PRO-ENGINEER DOCUMENT AND MAY NOT BE MODIFIED MANUALLY

UNLESS OTHERWISE SPECIFIED
DIMENSIONAL TOLERANCE
X ± .1
XX ± .01
XXX ± .005
ANGLES ± 30'

SURFACE FINISH 125
BREAK ALL EDGES .005/.015
CORNER RADIUS .010/.030
ALL ANGLES ARE 90°

QUADREL LABELING SYSTEMS
7670 JENTHER DRIVE
MENTOR, OHIO 44060
(440) 602-4700

SCALE: 1/2
DATE: Jan-03-18
DRW BY: CRT
CHK BY:03/09/2024-SEM
APPR BY:

VERSALINE WRAP MOUNTING ASSEMBLY

MAT'L

20306-700

SHEET 2 OF 2

## 7.6 BACK UP PLATE ASSEMBLY

### 7.6.1 GENERAL INFORMATION

The back up plate assembly paired with the wrap station applies pressure to cylindrical containers to apply labels.

### 7.6.2 ADJUSTMENTS

The back up plate assembly has a variety of adjustments. To adjust vertically loosen the 2 ratchet handles in the main mounting blocks and pull up or push down. To make adjustments left or right loosen the 8 socket head bolts and slide the assembly along the black rail towards the infeed or outfeed of the conveyor.

Moving the back up plate assembly in and out is achieved by loosening the 2 ratchet handles on the top of the assembly and turning the knob clockwise or counter clockwise. To tilt the back up plate assembly to accommodate a tapered container loosen the 2 5/16-18 bolts at the end of the shafts tilt the plate as needed and retighten the bolts.

**ASSEMBLY TITLE:** **BACK-UP PLATE ASSEMBLY**

**GENERAL FUNCTION:**

The back up plate assembly is mounted opposite the wrap station. The assembly provides the pressure to rotate the product plus impression of the label to the product. The back up plate must cover the entire label width and length to ensure complete impression. Certain products may require the use of different size plates to impress into recessed areas of the product.

**SET-UP AND ADJUSTMENTS:**

The only adjustment necessary is to ensure the horizontal pressure is sufficient to rotate the product completely and provide complete impression of the label. Place three products in wrap station area, one in the center of the wrap station, the other two at the in-feed and out-feed ends. Loosen knobs and slide backup plate close to the wrap station in order to apply light pressure to products. Retighten knobs when correct pressure is achieved.

**MAINTENANCE:**

- Clean all the parts that may acquire labels or glue residue.
- Exercise caution when removing bad labels from foam. Careless removal can result in torn foam which may leave the labeler inoperable until the roller is replaced.

**TROUBLESHOOTING:**

- none this section

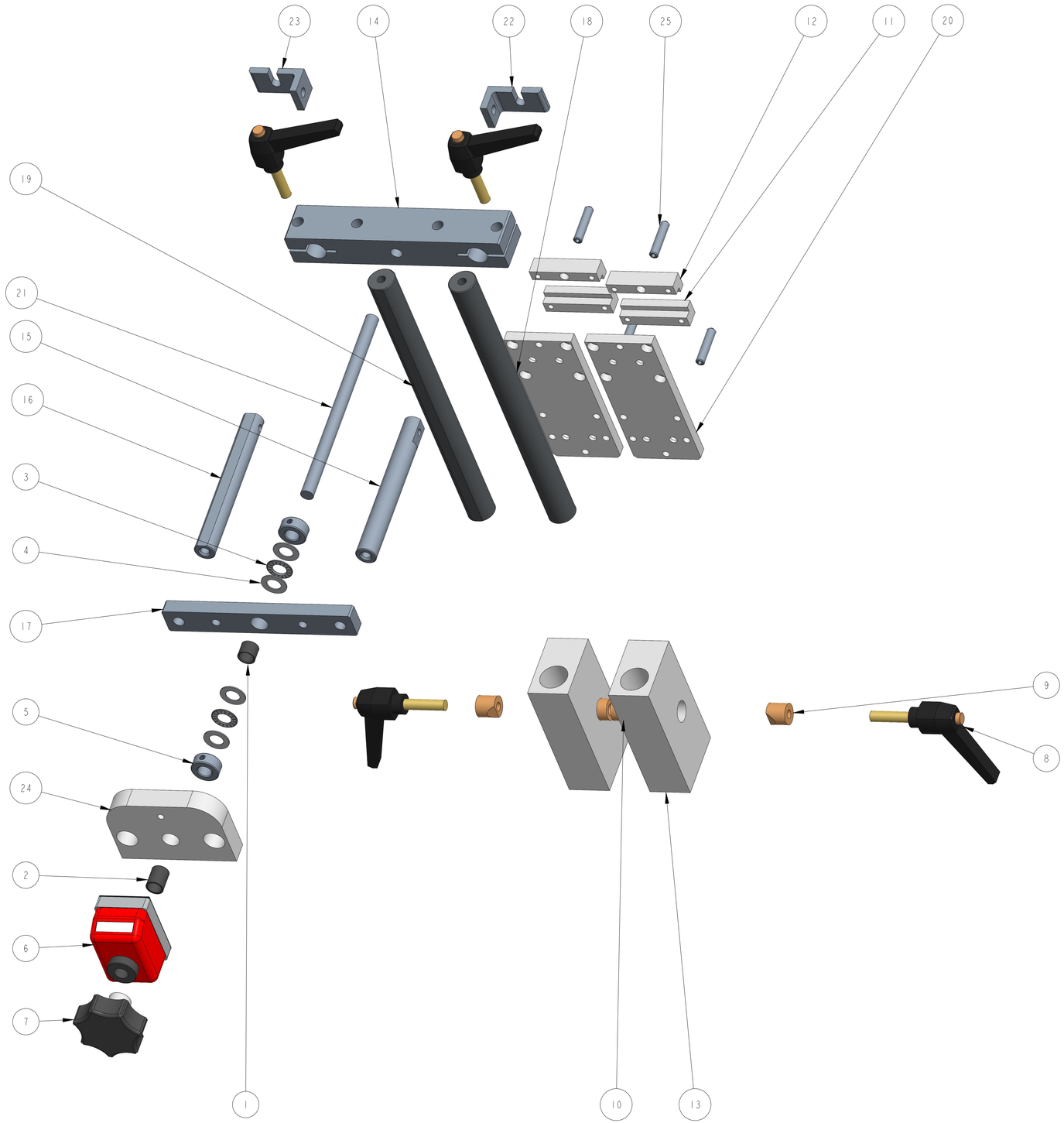


| ITEM | QTY | PART NO. | DESCRIPTION | PARENT ITEM |
|---|---|---|---|---|
| 1 | 1 | 141166-000 | BEARING, SLEEVE | 21485-83785 |
| 2 | 1 | 141177-000 | SLEEVE BEARING, 5/8OD. x 1/2ID. x 3/4LNG | 21485-83785 |
| 3 | 2 | 181079-000 | BEARING, NEEDLE ROLLER | 21485-83785 |
| 4 | 4 | 181080-000 | BEARING, THRUST WASHER | 21485-83785 |
| 5 | 2 | 362161-000 | COLLAR, SETSCREW, 1/2 IN. ID | 21485-83785 |
| 6 | 1 | 792354-000 | DIGITAL POSITION INDICATOR | 21485-83785 |
| 7 | 1 | 801320-000 | HAND KNOB | 21485-83785 |
| 8 | 4 | 801805-000 | CLAMPING LEVER | 21485-83785 |
| 9 | 2 | A20688-000 | LOCKING CLAMP | 21485-83785 |
| 10 | 2 | A20689-000 | LOCKING CLAMP | 21485-83785 |
| 11 | 2 | A20844-000 | GUIDE RAIL CLAMP BAR | 21485-83785 |
| 12 | 2 | A20845-000 | GUIDE RAIL CLAMP BAR | 21485-83785 |
| 13 | 2 | A21691-000 | MOUNTING BLOCK | 21485-83785 |
| 14 | 1 | A23474-000 | TRAVEL PLATE | 21485-83785 |
| 15 | 1 | A23475-026 | HORIZONTAL ADJUST ROD | 21485-83785 |
| 16 | 1 | A23476-026 | HORIZONTAL ADJUST ROD W/ FLAT | 21485-83785 |
| 17 | 1 | A23477-003 | ADJUSTMENT PLATE | 21485-83785 |
| 18 | 1 | A23478-003 | VERTICAL ADJUSTMENT ROD | 21485-83785 |
| 19 | 1 | A23479-003 | VERTICAL ADJUSTMENT ROD W/ FLAT | 21485-83785 |
| 20 | 2 | A23483-000 | MOUNTING PLATE | 21485-83785 |
| 21 | 1 | A23490-001 | THREADED ROD | 21485-83785 |
| 22 | 1 | A23853-010 | BACK-UP MOUNTING ANGLE | 21485-83785 |
| 23 | 1 | A23853-011 | BACK-UP MOUNTING ANGLE | 21485-83785 |
| 24 | 1 | B22005-012 | BEARING PLATE | 21485-83785 |
| 25 | 4 | SYE612 | | 21485-83785 |

NOT SHOWN:

C20537-238 BACKUP PLATE, 5.25" X 20"

| REV | DATE | DESCRIPTION | BY |
|---|---|---|---|
| A | 5-10-23 | NEW DRAWING | ATT |

THIS IS A PRO-ENGINEER DOCUMENT AND MAY NOT BE MODIFIED MANUALLY

UNLESS OTHERWISE SPECIFIED
DIMENSIONAL TOLERANCE
.X ± .1
.XX ± .01
.XXX ± .005
ANGLES ± 30'

SURFACE FINISH 125
BREAK ALL EDGES .005/.015
CORNER RADIUS .010/.030

QUADREL LABELING SYSTEMS
7670 JENTHER DRIVE
MENTOR, OHIO 44060
(440) 602-4700

SCALE: 1/2
DATE: 5-10-23
DRW BY: ATT
CHK BY: 03/05/2024-SEM
APPR BY:

BACK UP PLATE ADJUST

MAT'L

21485-83785

SHEET 1 OF 2

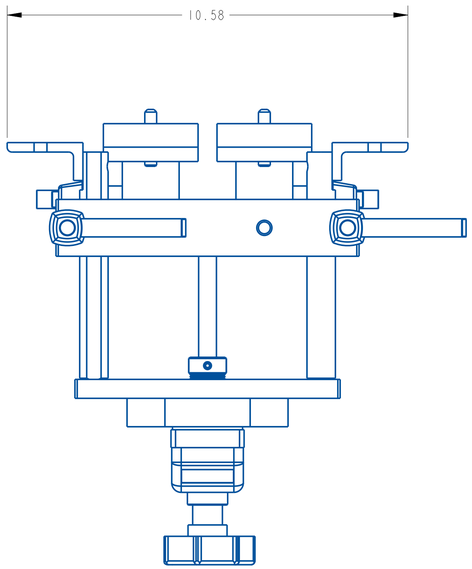


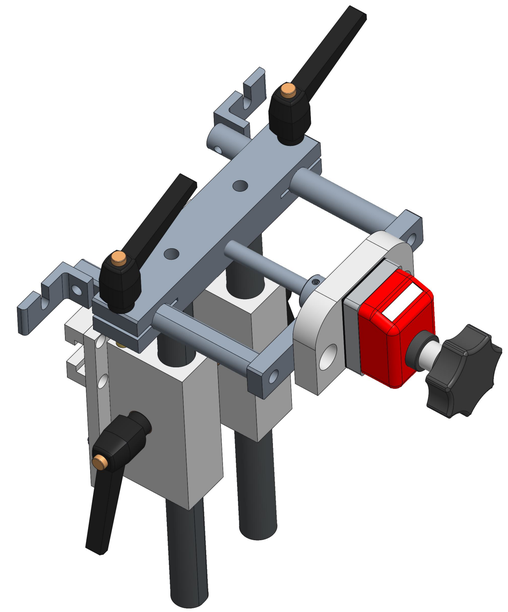

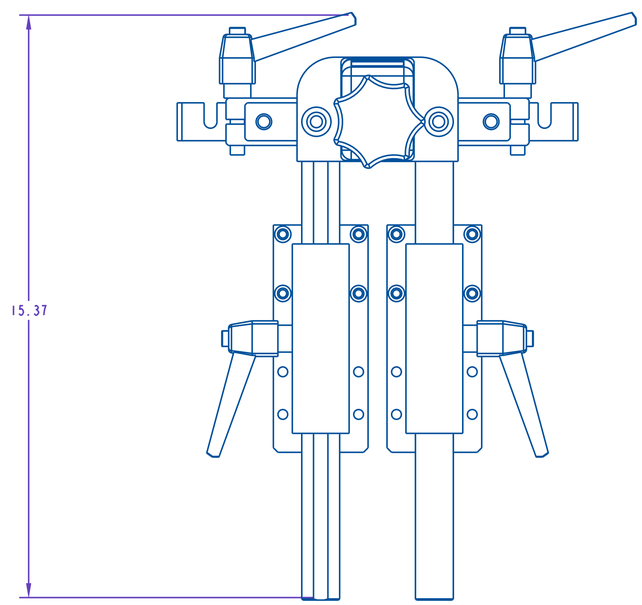


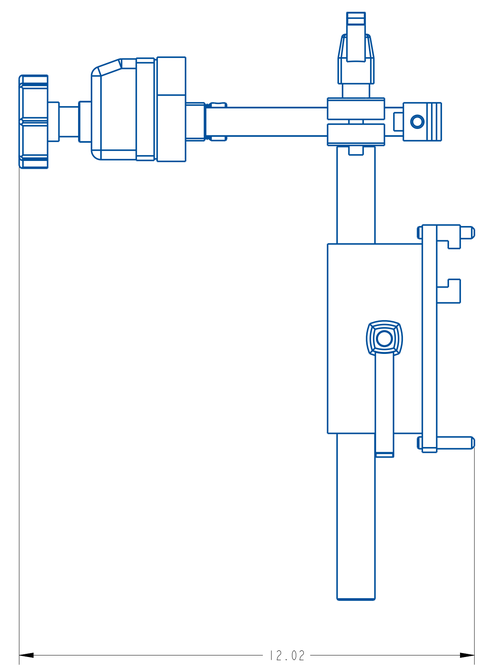


SHEET 2 OF 2

| REV | DATE | DESCRIPTION | BY |
|---|---|---|---|
| A | 5-10-23 | NEW DRAWING | ATT |

THIS IS A PRO-ENGINEER DOCUMENT AND MAY NOT BE MODIFIED MANUALLY

UNLESS OTHERWISE SPECIFIED
DIMENSIONAL TOLERANCE
X ± .1
XX ± .01
XXX ± .005
ANGLES ± 30'
SURFACE FINISH 125
BREAK ALL EDGES .005/.015
CORNER RADIUS .010/.030
ALL ANGLES ARE 90°

QUADREL LABELING SYSTEMS
7670 JENTHER DRIVE
MENTOR, OHIO 44060
(440) 602-4700

SCALE: 1/2
DATE: 5-10-23
DRW BY: ATT
CHK BY:03/05/2024-SEM
APPR BY:

BACK UP PLATE ADJUST

MAT'L

21485-83785

## 7.7 TOP HOLD DOWN ASSEMBLY

### 7.7.1 GENERAL INFORMATION

The top hold down module is a motor driven spring loaded belt that applies overhead pressure to the containers and enables the product to remain stable as the label is applied. This assembly is powered by an AC motor or servo motor. Ideal for front / back or single side applications.

### 7.7.2 ADJUSTMENTS

Adjusting the height of the top hold down is achieved by turning the hand wheel on the top of the assembly counter clockwise or clockwise.

**ASSEMBLY TITLE:** **TOP TRAP ASSEMBLY**

**GENERAL FUNCTION:**

- As a product enters the label application area near the labeling head, it needs additional support to prevent it from being upset as a label is applied. A product hold down conveyor or more commonly known as a "top trap" is used to provide product support.

  The speed of the top trap is set to match the speed of the conveyor and is encoder matched to follow conveyor speed changes.

**SETUP AND ADJUSTMENTS:**

- Place the product to be labeled under the top trap. Loosen clamp lever and turn the hand wheel so that the rubber belt of the top trap compresses the product slightly.
- When the desired height is achieved, tighten the clamp lever.
- The top trap is spring loaded to accommodate products that vary in height slightly.
- Top trap belt tension can be adjusted by tightening or loosening the set screws at the infeed end of the top trap.

**MAINTENANCE:**

- No maintenance is required except for an occasional belt replacement.

**TROUBLESHOOTING:**

| PROBLEM | WHAT TO DO |
|---|---|
| - Top trap jumping teeth | - Tighten top trap belt |
| - Too much pressure on product | - Raise top trap |
| - Top trap not moving | - Check drive belts and replace if broken. |
| - Top trap swaying under load. | - Tighten clamp lever. Tighten pulleys and shafts. |

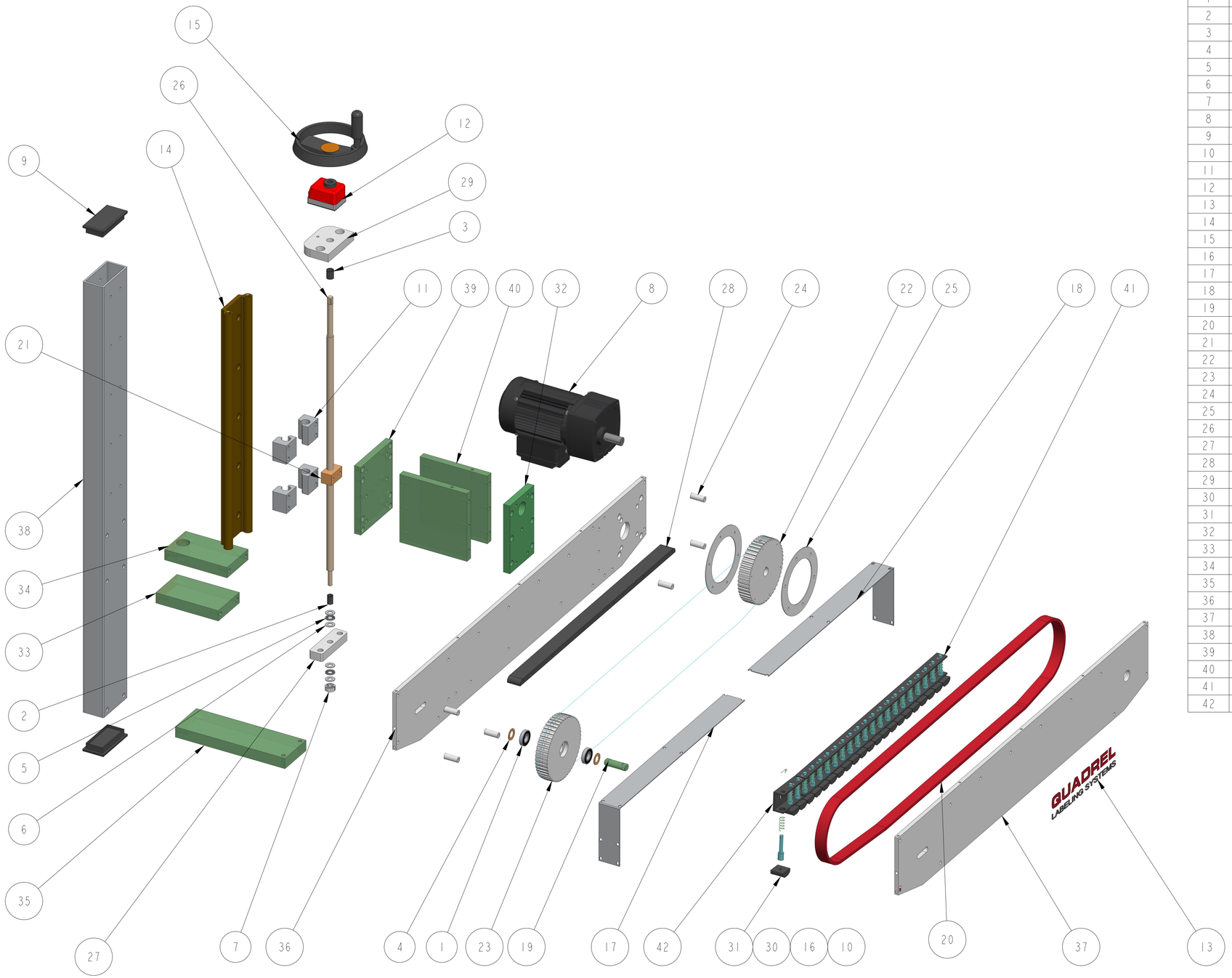


| ITEM | QTY | PART NO. | DESCRIPTION | PARENT ITEM |
|---|---|---|---|---|
| 1 | 2 | 111075-000 | BEARING, BALL | 22878-00R |
| 2 | 1 | 141172-000 | SLEEVE BEARING, 1/2OD. x 3/8ID. x 3/4LNG | 22878-00R |
| 3 | 1 | 141177-000 | SLEEVE BEARING, 5/8OD. x 1/2ID. x 3/4LNG | 22878-00R |
| 4 | 2 | 151008-000 | BEARING, THRUST WASHER | 22878-00R |
| 5 | 2 | 181108-000 | BEARING, NEEDLE ROLLER | 22878-00R |
| 6 | 4 | 181111-000 | THRUST WASHER | 22878-00R |
| 7 | 1 | 362186-000 | COLLAR, 3/8 IN. ID ONE-PIECE CLAMP | 22878-00R |
| 8 | 1 | 413016-000 | GEARMOTOR-3/8HP-57 RPM 3PHASE | 22878-00R |
| 9 | 2 | 729006-000 | CAP INSERT FOR 2 X 4 TUBE | 22878-00R |
| 10 | 22 | 791975-001 | R-CLIP | 22878-00R |
| 11 | 4 | 792248-001 | PILLOW BLOCK | 22878-00R |
| 12 | 1 | 792354-002 | DIGITAL POSITION INDICATOR | 22878-00R |
| 13 | 1 | 793013-000 | QUADREL Logo ( 3"x11" ) | 22878-00R |
| 14 | 1 | 793035-001 | DRYLIN RAIL | 22878-00R |
| 15 | 1 | 801080-000 | 6" HANDWHEEL | 22878-00R |
| 16 | 22 | 811256-000 | COMPRESSION SPRING | 22878-00R |
| 17 | 1 | A21578-040 | TOP TRAP COVER PLATE | 22878-00R |
| 18 | 1 | A21578-041 | TOP TRAP COVER PLATE | 22878-00R |
| 19 | 1 | A21823-000 | IDLER SHAFT | 22878-00R |
| 20 | 1 | A21830_601 | TIMING BELT,RED LINOTEX | 22878-00R |
| 21 | 1 | A24077-000 | BRONZE NUT, RH | 22878-00R |
| 22 | 1 | A25122-600 | DRIVE PULLEY | 22878-00R |
| 23 | 1 | A25122-602 | IDLER PULLEY | 22878-00R |
| 24 | 6 | A26053-000 | SPACER | 22878-00R |
| 25 | 2 | A26197-000 | PULLEY FLANGE | 22878-00R |
| 26 | 1 | B20045-200 | THREADED ROD | 22878-00R |
| 27 | 1 | B21346-000 | BOTTOM BEARING PLATE | 22878-00R |
| 28 | 1 | B21769-000 | TOP TRAP SPACER | 22878-00R |
| 29 | 1 | B22005-012 | BEARING PLATE | 22878-00R |
| 30 | 22 | B22784-000 | SPRING BLOCK STEM | 22878-00R |
| 31 | 22 | B22785-000 | SPRING BLOCK PLATE | 22878-00R |
| 32 | 1 | B22790-002 | TOP PACING CONNECTOR PLATE | 22878-00R |
| 33 | 1 | B22791-010 | TOP TRAP SPACER | 22878-00R |
| 34 | 1 | B22791-011 | TOP TRAP SPACER | 22878-00R |
| 35 | 1 | B23256-007 | TOP TRAP SPACER | 22878-00R |
| 36 | 1 | C21268-840 | INSIDE TOP TRAP PLATE | 22878-00R |
| 37 | 1 | C21268-841 | INSIDE TOP TRAP PLATE | 22878-00R |
| 38 | 1 | C21292-001 | TOP TRAP RISER | 22878-00R |
| 39 | 1 | C21293-001 | TOP TRAP MOUNTING PLATE | 22878-00R |
| 40 | 2 | C21293_700 | TOP TRAP MOUNTING PLATE | 22878-00R |
| 41 | 1 | D24415-000 | SPRING BLOCK MOUNTING CHANNEL | 22878-00R |
| 42 | 1 | D24415-001 | SPRING BLOCK MOUNTING CHANNEL | 22878-00R |

| REV | DATE | DESCRIPTION | BY |
|---|---|---|---|
| A | 03-OCT-2024 | NEW DRAWING | CRT |

THIS IS A PRO-ENGINEER DOCUMENT AND MAY NOT BE MODIFIED MANUALLY

UNLESS OTHERWISE SPECIFIED
DIMENSIONAL TOLERANCE
.X ± .1
.XX ± .01
.XXX ± .005
ANGLES ± 30'

SURFACE FINISH 125
BREAK ALL EDGES .005/.015
CORNER RADIUS .010/.030

QUADREL LABELING SYSTEMS
7670 JENTHER DRIVE
MENTOR, OHIO 44060
(440) 602-4700

SCALE: 0.219
DATE: 03-OCT-2024
DRW BY: CRT
CHK BY: 11/04/2025-SEM
APPR BY:

TOP TRAP,7-1/2"W-CONV. W/SIKO 57 RPM

MAT'L

22878-00R

SHEET 1 OF 2

11.9

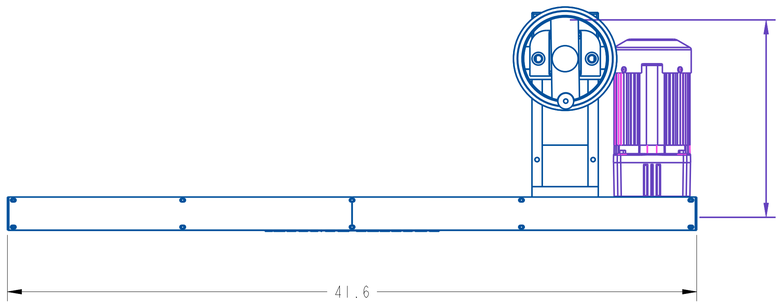


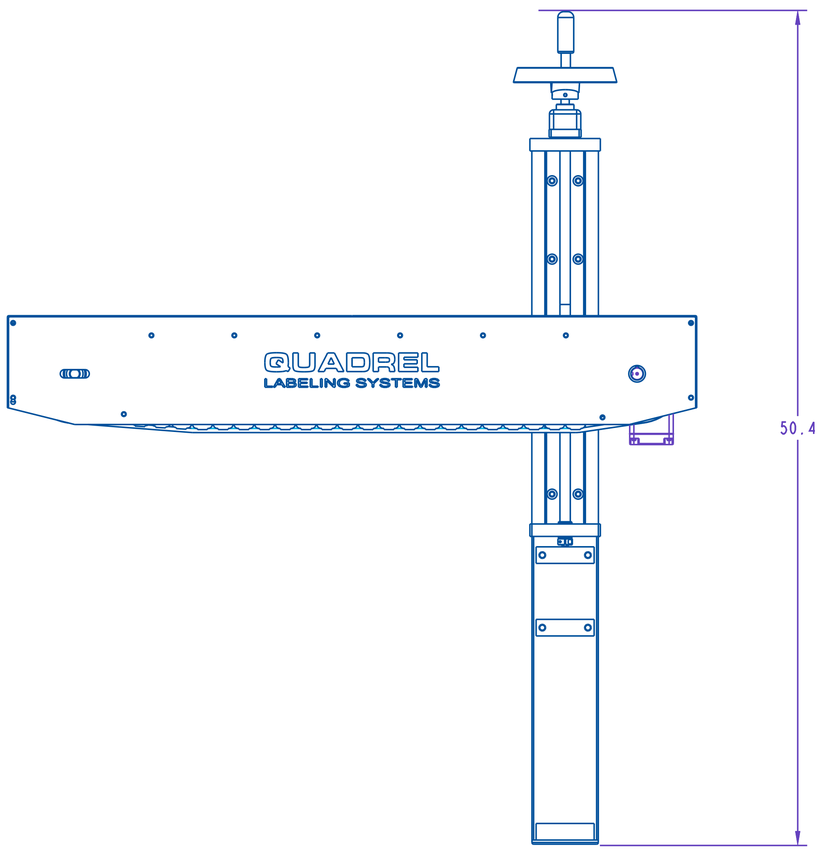


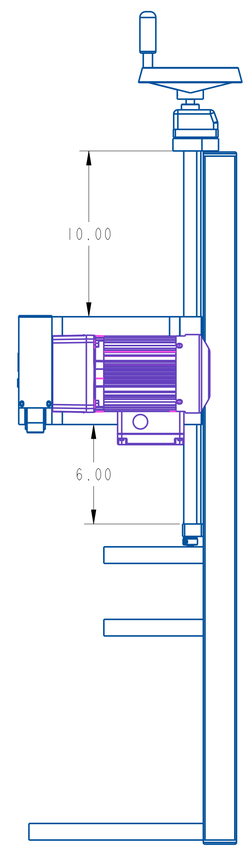


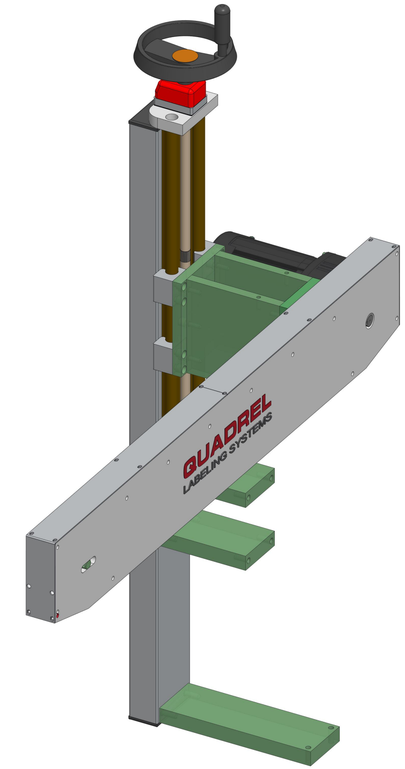


| REV | DATE | DESCRIPTION | BY |
|---|---|---|---|
| A | 03-OCT-2024 | NEW DRAWING | CRT |

THIS IS A PRO-ENGINEER DOCUMENT AND MAY NOT BE MODIFIED MANUALLY

UNLESS OTHERWISE SPECIFIED
DIMENSIONAL TOLERANCE
.X ± .1
.XX ± .01
.XXX ± .005
ANGLES ± 30'

SURFACE FINISH 125
BREAK ALL EDGES .005/.015
CORNER RADIUS .010/.030

QUADREL LABELING SYSTEMS
7670 JENTHER DRIVE
MENTOR, OHIO 44060
(440) 602-4700

SCALE: 0.219
DATE: 03-OCT-2024
DRW BY: CRT
CHK BY: 11/04/2025-SEM
APPR BY:

TOP TRAP, 7-1/2"W-CONV. W/SIKO 57 RPM

MAT'L

22878-00R

SHEET 2 OF 2

| ITEM | QTY | PART NO. | DESCRIPTION | PARENT ITEM |
|---|---|---|---|---|
| 1 | 2 | 30653-000 | CLAMPING ROD ASSEMBLY | 22708-014 |
| 2 | 1 | 391801-000 | FITTING, 1/4 TUBE X 1/8 NPT ELBOW | 22708-014 |
| 3 | 1 | 391862-000 | PLUG, 1/8 NPT | 22708-014 |
| 4 | 1 | 392270-000 | REGULATOR W/GAGE | 22708-014 |
| 5 | 2 | 791460-001 | | 22708-014 |
| 6 | 4 | 801308-000 | KNOB W/ 1/4-20 STUD | 22708-014 |
| 7 | 2 | A20875-000 | RETAINER BLOCK, CONV. RAIL | 22708-014 |
| 8 | 2 | A20876-000 | RETAINER BLOCK | 22708-014 |
| 9 | 2 | A21198-000 | ADJUSTMENT ROD | 22708-014 |
| 10 | 1 | A25745-004 | AIR ASSIST TUBE 1/2 DIA. 14.75" LONG | 22708-014 |

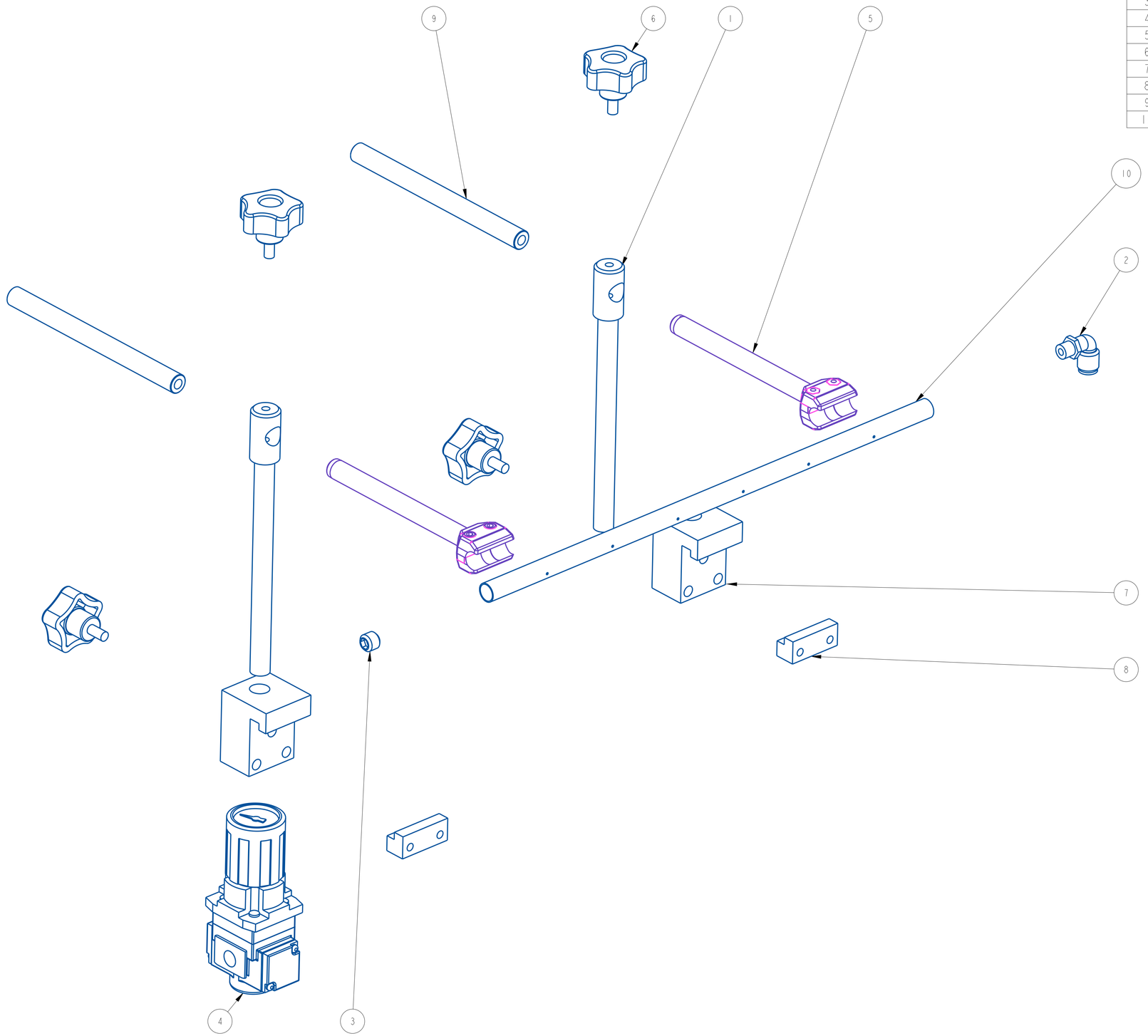


| REV | DATE | DESCRIPTION | BY |
|---|---|---|---|
| B | Feb-04-25 | ADDED PARTS | TAZ |
| A | Dec-05-24 | NEW DRAWING | TAZ |

THIS IS A PRO-ENGINEER DOCUMENT AND MAY NOT BE MODIFIED MANUALLY

UNLESS OTHERWISE SPECIFIED
DIMENSIONAL TOLERANCE
.X ± .1
.XX ± .01
.XXX ± .005
ANGLES ± 30'

SURFACE FINISH 125
BREAK ALL EDGES .005/.015
CORNER RADIUS .010/.030

QUADREL LABELING SYSTEMS
7670 JENTHER DRIVE
MENTOR, OHIO 44060
(440) 602-4700

SCALE: 3/4
DATE: Dec-05-24
DRW BY: TAZ
CHK BY: 12/09/2024-SEM
APPR BY:

AIR ASSIST

MAT'L AS SHOWN

22708-014

SHEET 1 OF 2

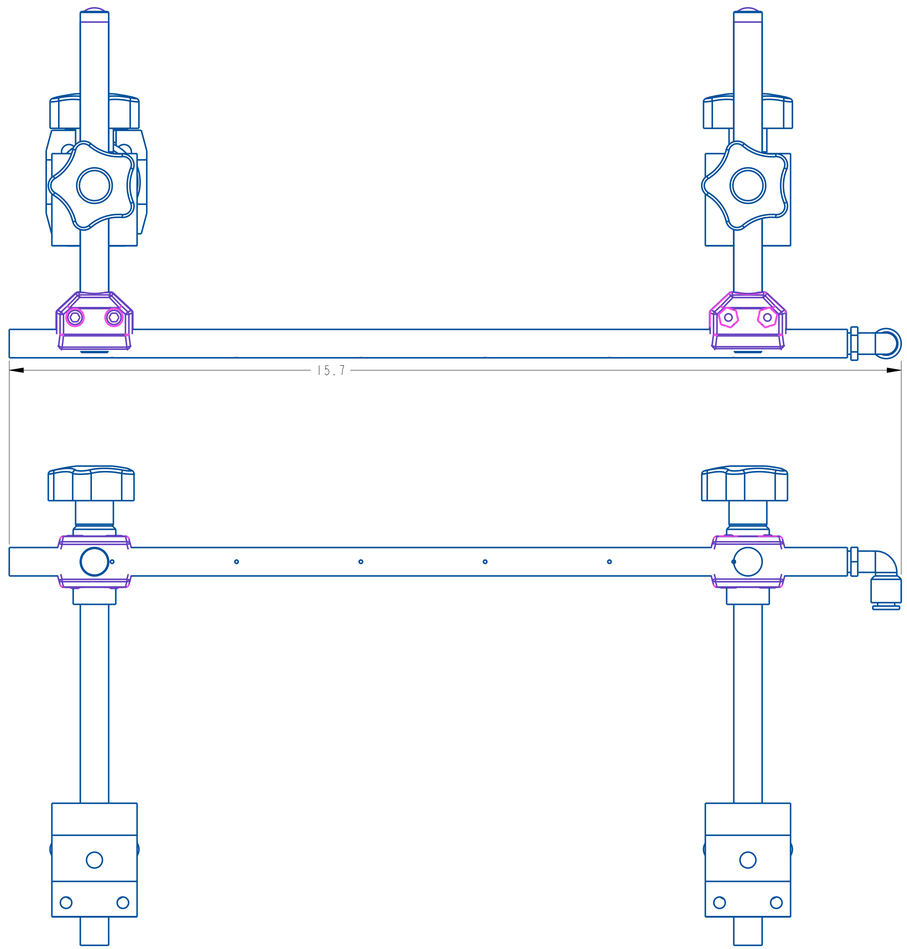


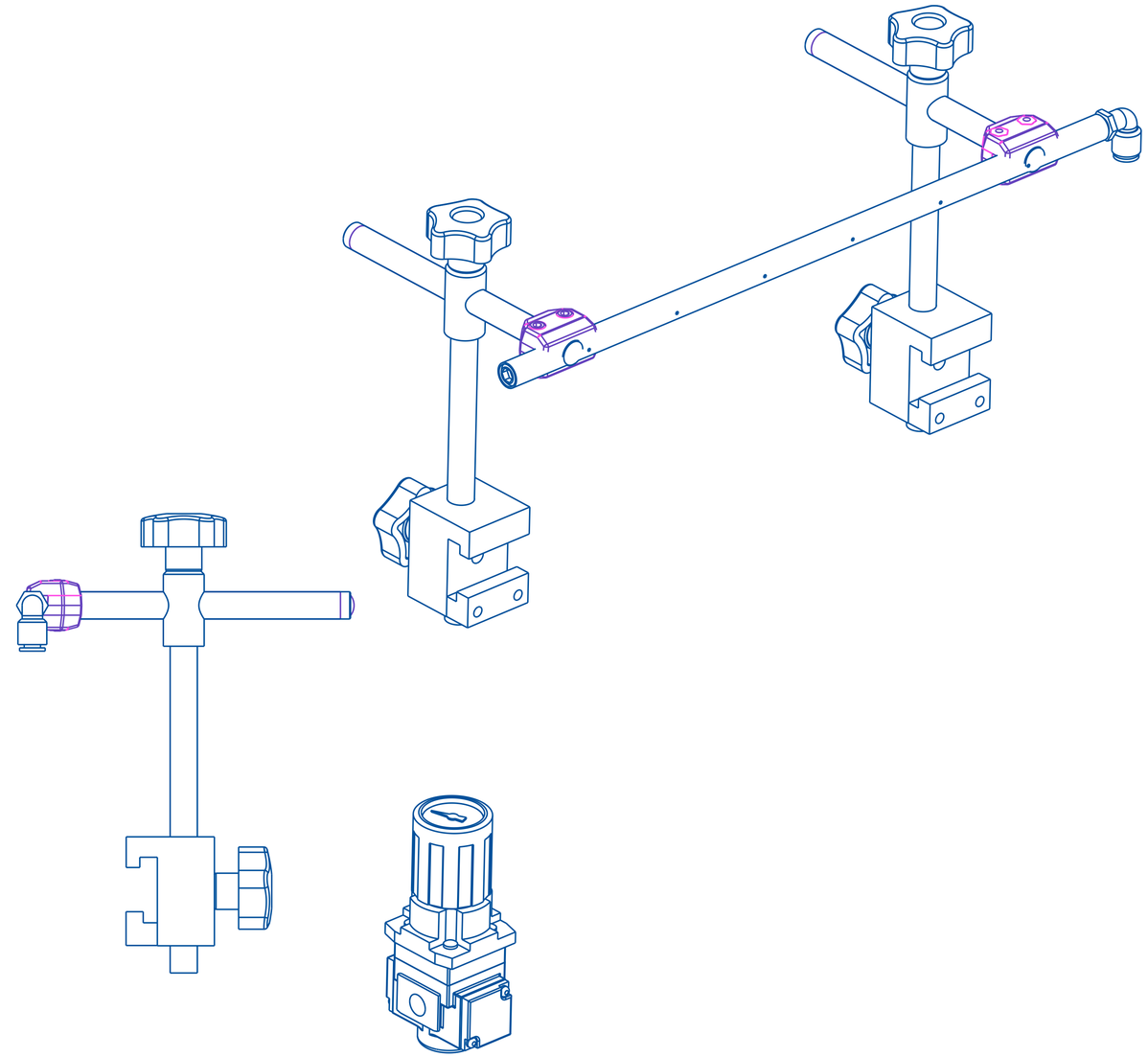

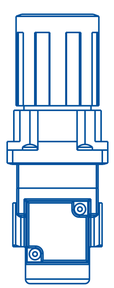

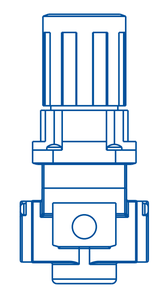

| REV | DATE | DESCRIPTION | BY |
|---|---|---|---|
| B | Feb-04-25 | ADDED PARTS | TAZ |
| A | Dec-05-24 | NEW DRAWING | TAZ |

THIS IS A PRO-ENGINEER DOCUMENT AND MAY NOT BE MODIFIED MANUALLY

UNLESS OTHERWISE SPECIFIED
DIMENSIONAL TOLERANCE
X ± .1
XX ± .01
XXX ± .005
ANGLES ± 30'

SURFACE FINISH 125
BREAK ALL EDGES .005/.015
CORNER RADIUS .010/.030
ALL ANGLES ARE 90°

QUADREL LABELING SYSTEMS
7670 JENTHER DRIVE
MENTOR, OHIO 44060
(440) 602-4700

SCALE: 3/4
DATE: Dec-05-24
DRW BY: TAZ
CHK BY: 12/09/2024-SEM
APPR BY:

AIR ASSIST

MAT'L 22708-014

22708-014

SHEET 2 OF 2

| ITEM | QTY | PART NO. | DESCRIPTION | PARENT ITEM |
|---|---|---|---|---|
| 1 | 1 | 391201-000 | FILTER, AIR | 22677-000 |
| 2 | 1 | 391201-MTG | FILTER / REGULATOR W/GUAGE & BRK | 22677-000 |
| 3 | 1 | 391811-000 | DISCONNECT, SLEEVE | 22677-000 |
| 4 | 1 | 391906-000 | 90 ELBOW | 22677-000 |
| 5 | 1 | 391954-000 | FITTING, 1/4 NPT QUICK DISCONNECT | 22677-000 |
| 6 | 1 | 392111-000 | 3/8" TUBE TO 1/8" THREAD MALE ELBOW | 22677-000 |

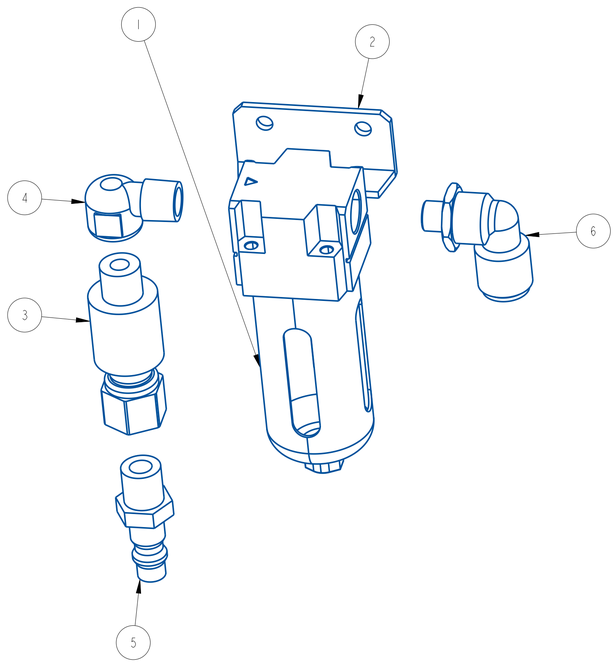


| REV | DATE | DESCRIPTION | BY |
|---|---|---|---|
| A | 8-17-22 | NEW DRAWING | ATT |

THIS IS A PRO-ENGINEER DOCUMENT AND MAY NOT BE MODIFIED MANUALLY

UNLESS OTHERWISE SPECIFIED DIMENSIONAL TOLERANCE
.X ± .1
.XX ± .01
.XXX ± .005
ANGLES ± 30'

SURFACE FINISH 125
BREAK ALL EDGES .005/.015
CORNER RADIUS .010/.030"

QUADREL LABELING SYSTEMS
7670 JENTHER DRIVE
MENTOR, OHIO 44060
(440) 602-4700

SCALE: 1/1
DATE: 8-17-22
DRW BY: ATT
CHK BY: 03/05/2024-SEM
APPR BY:

PNEUMATIC INLET

MAT'L

22677-000

SHEET 1 OF 2

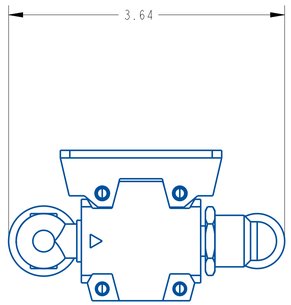


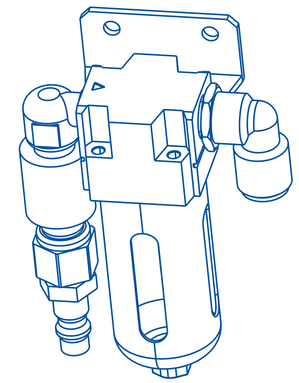

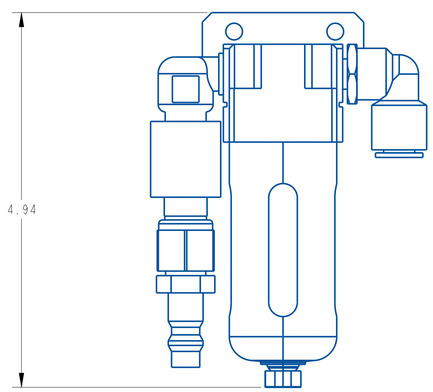


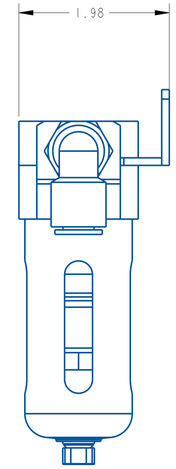


| REV | DATE | DESCRIPTION | BY |
|---|---|---|---|
| A | 8-17-22 | NEW DRAWING | ATT |

THIS IS A PRO-ENGINEER DOCUMENT AND MAY NOT BE MODIFIED MANUALLY

UNLESS OTHERWISE SPECIFIED
DIMENSIONAL TOLERANCE
.X ± .1
.XX ± .01
.XXX ± .005
ANGLES ± 30'

SURFACE FINISH 125
BREAK ALL EDGES .005/.015
CORNER RADIUS .010/.030
ALL ANGLES ARE 90°

QUADREL LABELING SYSTEMS
7670 JENTHER DRIVE
MENTOR, OHIO 44060
(440) 602-4700

SCALE: 1/1
DATE: 8-17-22
DRW BY: ATT
CHK BY:03/05/2024-SEM
APPR BY:

PNEUMATIC INLET

MAT'L

22677-000

SHEET 2 OF 2

**ASSEMBLY TITLE:** **PRODUCT DETECT ASSEMBLY**

**GENERAL FUNCTION:**

The product detect signal is used to trigger the labeling cycle. Optimum placement and setup of the product detect sensor is critical to accurate and repeatable label placement.

**SETUP AND ADJUSTMENTS:**

Set the position of the product detect sensor at a point up-steam of the peel plate area. Set the vertical position of the sensor at a point on the product that provides a stable and repeatable sense area. Loosen the vertical adjustment knobs to move the assembly along the vertical axis.

Follow the manufactures data sheet for a particular set and calibration.

**MAINTENANCE:**

No scheduled maintenance is required for this assembly. Always keep the drive areas free of label flash and debris.

**CAUTION:** Before performing any maintenance or cleaning make sure the system is powered down.

**TROUBLESHOOTING:**

| **PROBLEM:** | **WHAT TO DO:** |
|---|---|
| - No label trigger or intermittent trigger. | - Product does not intersect sensor scan field. Adjust sensor position until sensor detects product.<br>- Sensor gain set is too low. Increase gain until sensor indicator displays ON status(with product in sensor field). |

| ITEM | QTY | PART NO. | DESCRIPTION | PARENT ITEM |
|---|---|---|---|---|
| 1 | 1 | 202192-002 | CLEAR PRODUCT SENSOR | 21560-012 |
| 2 | 1 | 203160-000 | REFLECTOR | 21560-012 |
| 3 | 1 | 252019-000 | 4 PIN MALE CONNECTOR | 21560-012 |
| 4 | 2 | A20875-000 | RETAINER BLOCK, CONV. RAIL | 21560-012 |
| 5 | 2 | A20876-000 | RETAINER BLOCK | 21560-012 |
| 6 | 1 | A24278-000 | SENSOR MTG. SHAFT | 21560-012 |
| 7 | 1 | A24279-000 | REFLECTOR MTG. SHAFT | 21560-012 |

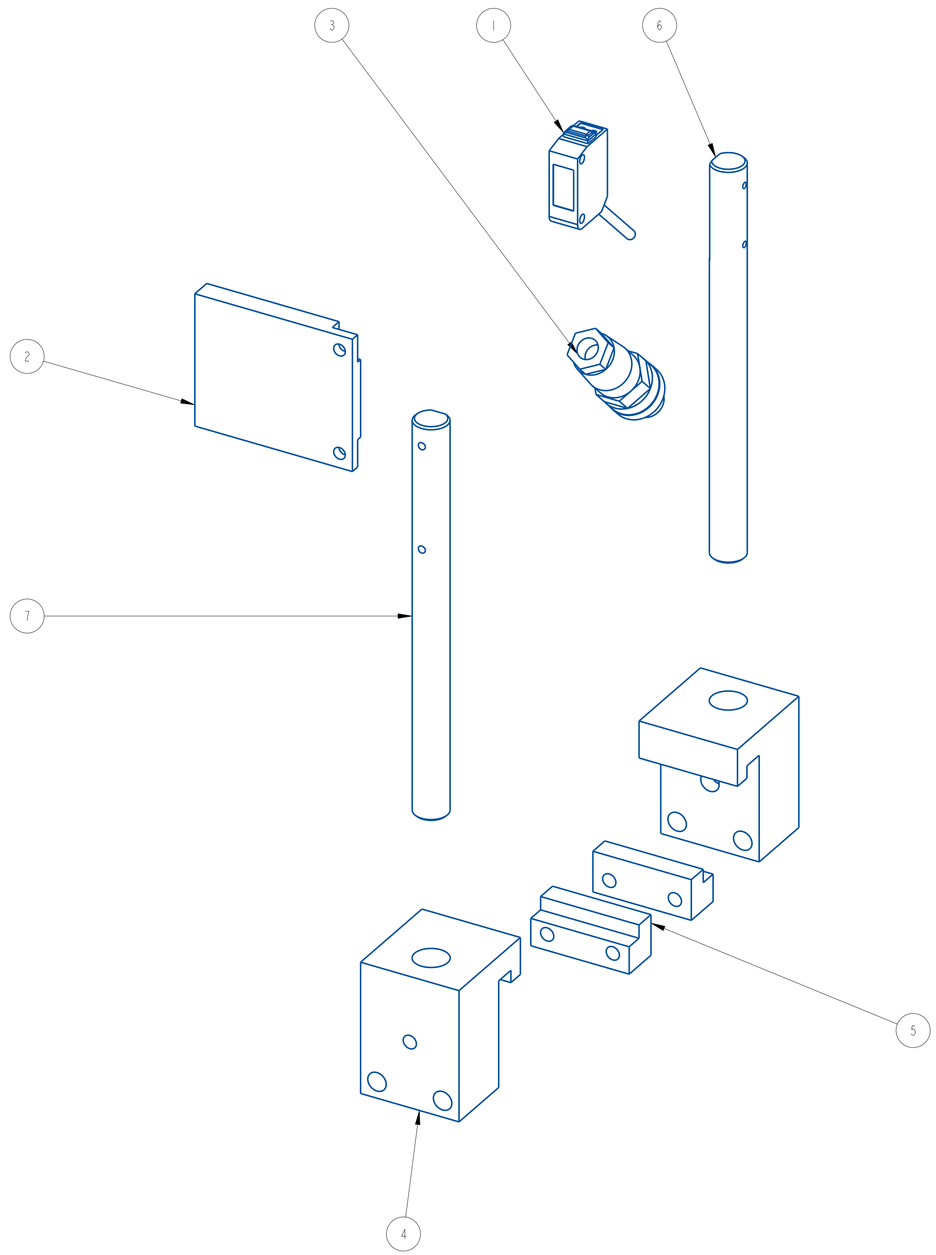


| REV | DATE | DESCRIPTION | BY |
|---|---|---|---|
| A | 07/18/2024 | NEW DRAWING | SEM |

THIS IS A PRO-ENGINEER DOCUMENT AND MAY NOT BE MODIFIED MANUALLY

UNLESS OTHERWISE SPECIFIED
DIMENSIONAL TOLERANCE
.X ± .1
.XX ± .01
.XXX ± .005
ANGLES ± 30°

SURFACE FINISH 125
BREAK ALL EDGES .005/.015
CORNER RADIUS .010/.030


QUADREL LABELING SYSTEMS
7670 JENTHER DRIVE
MENTOR, OHIO 44060
(440) 602-4700


SCALE: 1/1
DATE: 07/18/2024
DRW BY: SEM
CHK BY: 07/18/2024-SEM
APPR BY:

CLEAR PRODUCT DETECT, PNP

MAT'L 21560-002

21560-012

SHEET 1 OF 2

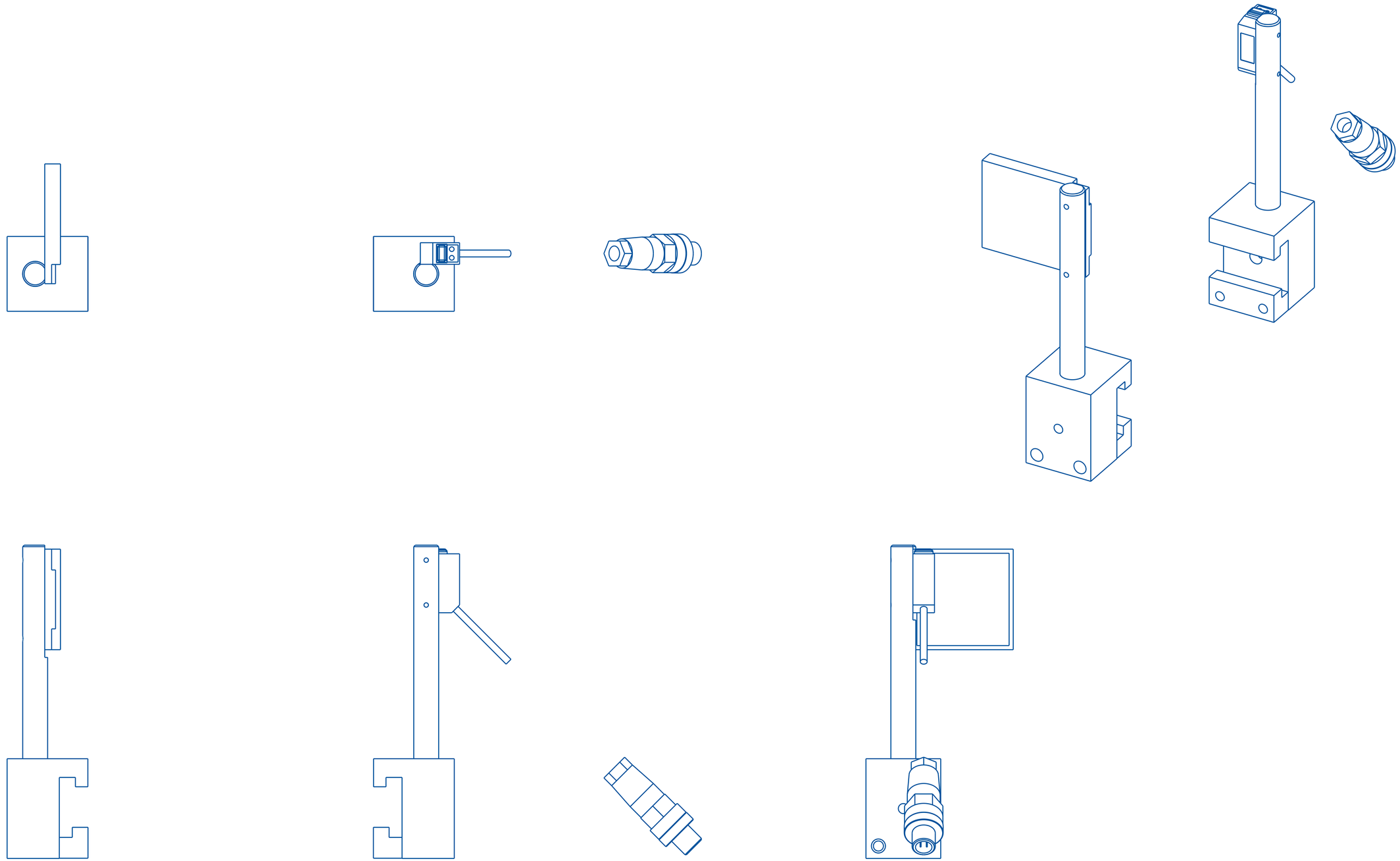

| REV | DATE | DESCRIPTION | BY |
|---|---|---|---|
| A | 07/18/2024 | NEW DRAWING | SEM |

THIS IS A PRO-ENGINEER DOCUMENT AND MAY NOT BE MODIFIED MANUALLY

UNLESS OTHERWISE SPECIFIED
DIMENSIONAL TOLERANCE
X ± .1
XX ± .01
XXX ± .005
ANGLES ± 30'

SURFACE FINISH 125
BREAK ALL EDGES .005/.015
CORNER RADIUS .010/.030
ALL ANGLES ARE 90°

QUADREL LABELING SYSTEMS
7670 JENTHER DRIVE
MENTOR, OHIO 44060
(440) 602-4700

SCALE: 1/1
DATE: 07/18/2024
DRW BY: SEM
CHK BY: 07/18/2024-SEM
APPR BY:

CLEAR PRODUCT DETECT, PNP

MAT'L 21560-002

21560-012

SHEET 2 OF 2

KEYENCE

96M11227

Self-contained Photoelectric Sensor

# PZ-G Series

## Instruction Manual

Read this manual thoroughly before using the product.
Keep this manual readily available for future reference.

### ■ Safety precautions

- Avoid running the PZ-G cable along with power and high voltage lines, as this may cause interference and/or permanent damage.
- When using a commercially available switching regulator, ground its chassis grounding and earth grounding terminals.
- Do not use in locations where direct ambient light or external light directly shines on the light receiving surface.
- With retro-reflective type sensors, when detecting highly reflective materials (such as mirrored surfaces), stabilization may be difficult. To correct this, change the angle of the sensor head, or adjust the sensitivity.
- Avoid using power which exceeds the specifications for ripple (10% max)
- Avoid using excess force when rotating the operation mode selector switch (Light-on, Dark-on) and the sensitivity adjustment trimmer.
- This product is just intended to detect the object(s). Do not use this product for the purpose to protect a human body or a part of human body.
- This product is not intended for use as explosion-proof product. Do not use this product in a hazardous location and/or potentially explosive atmosphere.

## Precautions on Regulations and Standards

### ■ UL Certificate

This product is an UL/C-UL Listed product.

- UL File No. E301717
- Category NRKH,NRKH7
- Enclosure Type 1 (Based on UL50)

Be sure to consider the following specifications when using this product as an UL/C-UL Listed Product.

- Use the power supply with Class 2 output defined in NFPA70 (NEC: National Electrical Code).
- Power supply/ Control input/ Control output circuits shall be connected to a single Class 2 source only.
- Use with the over current protection device which is rated 30V or more and not more than 1A.

## Part Names

● **PZ-G5xN/G5xP**

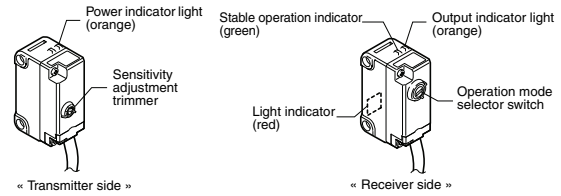


● **PZ-G5xB**

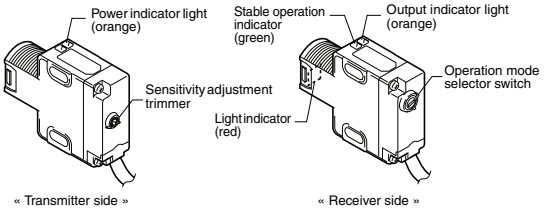


● **PZ-G4xN/G4xP/G10xN/G10xP/G6xN/G6xP**

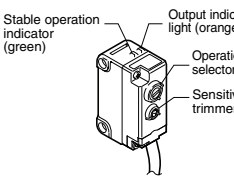


● **PZ-G4xB/G10xB/G6xB**

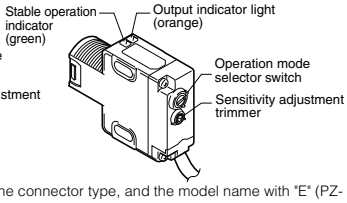


* The model name with "C" (PZ-GxxCx) is the connector type, and the model name with "E" (PZ-GxxEx) is the pigtail quick disconnect type.

## Mounting Method

### ■ Side Mounting (Prepare M3 screws)

Tightening torque: 0.5 N·m or less

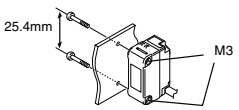


Tightening torque: 0.5 N·m or less

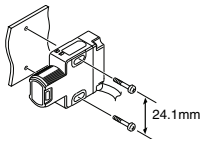


### ■ Mounting with the M18 nut (includes nut type)

The M18 nut is also available separately as OP-84225 (2 pcs. supplied).
Tightening torque:1.0 N·m or less

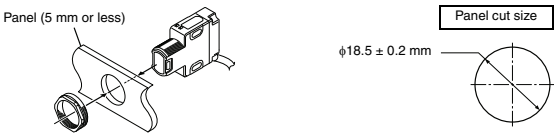


**Note**

- Mount the M18 nut (supplied) straight in. If mounted at an angle it cannot be tightened properly.
- When tightening the M18 nut (supplied), firmly hold the main body down. The case of the main body may be damaged if held in place with a tool such as pliers.
- When tightening the M18 nut (supplied), if excess force is applied to the nut with a tool such as pliers, it may bend it out of shape. Therefore, do not apply excess force.

## Sensitivity Adjustment Method

| Caution ⚠ | Avoid using excess force when rotating the sensitivity adjustment trimmer and operation mode selector switch as it may cause damage. | 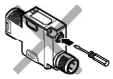 |
|---|---|---|

### ■ Operation mode selector switch

With the operation mode selector switch, you can select either the LIGHT-ON mode (L) or the DARK-ON (D) mode.

LIGHT-ON setting

DARK-ON setting

### ■ Reflective type (PZ-G41/G42/G101/G102/G10R/G10G/G10B Series)

The following assumes LIGHT-ON (L) is set.

| Sequence | Adjustment method | Sensitivity adjustment trimmer |
|---|---|---|
| ① | Position target in place. Slowly rotate the sensitivity trimmer from the MIN position towards the MAX position until the (orange) output indicator turns on (Position "A"). If the output indicator does not turn off, even at MIN, then MIN is considered Position "A". | |
| ② | Remove the target. Adjust the sensitivity trimmer from MIN towards MAX until the (orange) output indicator turns on (Position "B"). If the output indicator does not light up, the MAX position is considered Position "B". | |
| ③ | Adjust the sensitivity trimmer to the midpoint between "A" and "B". Verify that the (green) stable operation light turns on with and without a target in place. | |

**Reference** To use the sensor in DARK-ON mode, adjust the mode selector switch to "D".

### ■ Thrubeam type (PZ-G51/G52 Series) / Retro-reflective type (PZ-G61/G62 Series)

The following assumes DARK-ON (D) is set.

| Sequence | Adjustment method | Sensitivity adjustment trimmer |
|---|---|---|
| ① | Remove the target. Adjust the sensitivity trimmer to MAX. Mount the sensor heads in place so the (orange) output indicator turns off (on thrubeam models, the red light on the receiver face will turn on) | |
| ② | Position target in place. Verify that the orange output indicator turns on (on thrubeam models, the red light on the receiver face will turn off). Adjust sensitivity lower if the output indicator does not turn on (or if the red light on the receiver face does not turn off on thrubeam models) | |

**Reference** To use the sensor in LIGHT-ON mode, adjust the mode selector switch to "L".

## I/O Circuit Diagram

● **PZ-G5xN/G5xP/G5xB (Transmitter side)**

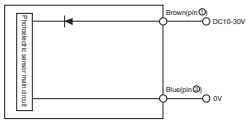


● **PZ-G5xN (Receiver side)/ G4xN/G10xN/G6xN**

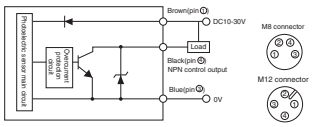


● **PZ-G5xP (Receiver side)/ G4xP/G10xP/G6xP**

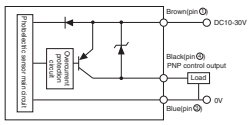


● **PZ-G5xB (Receiver side)/ G4xB/G10xB/G6xB**

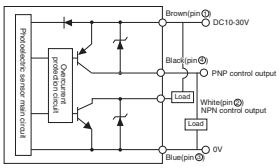


* The pin numbers represent those of the connector type / pigtail quick disconnect type.
The model name with "C" (PZ-GxxCx) is the connector type, and the model name with "E" (PZ-GxxEx) is the pigtail quick disconnect type.

PZ-GxxCN/GxxCP..... M8 connector
PZ-GxxCB/GxxEN/GxxEP..... M12 connector

## ■ Indicators

The following describes each ON/OFF condition of indicator when LIGHT-ON (L) is set.

**Reference** When the DARK-ON (D) is set, the output indicator ON/OFF will reverse.

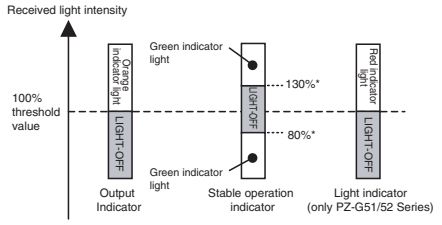


* For PZ-G62, the upper limit is 107% and the lower limit is 93%.

If the stable operation indicator turns off during operation, readjust or fine-adjust the sensitivity.

## ■ Mutual interference

- For reflective type / retro-reflective type sensors, mutual interference protection can be set for up to 2 units. However, when the sensors are mounted facing each other, change the angle of the sensor head to prevent light being emitted into each unit.(The mark detection type does not include the mutual interference function.)
- Mutual interference prevention can be set when mounting a polarizing filter attachment (optional with thrubeam type sensors) (If operation is unstable even after mounting the polarizing filter, slightly lower the sensitivity.)
- For more detailed information about mutual interference or attachment, see the PZ-G Series catalog or contact your nearest KEYENCE office.

# Specifications

| Type | | | Thrubeam | | Reflective | | | | Retro-reflective | | Mark detection | | |
|---|---|---|---|---|---|---|---|---|---|---|---|---|---|
| Configuration | Cable shape | Output mode | Normal | High-power | Diffuse-reflective Long-detecting distance | Diffuse-reflective Short-detecting distance | Narrow-view reflective | Definite reflective | Long detecting distance (with P.R.O. function) | Transparent target detection (without P.R.O. function) | Red | Green | Blue |
| Rectangular | Cable | NPN | PZ-G51N | PZ-G52N | PZ-G41N | PZ-G42N | PZ-G101N | PZ-G102N | PZ-G61N | PZ-G62N | - | | |
| | | PNP | PZ-G51P | PZ-G52P | PZ-G41P | PZ-G42P | PZ-G101P | PZ-G102P | PZ-G61P | PZ-G62P | | | |
| | M8 connector | NPN | PZ-G51CN | PZ-G52CN | PZ-G41CN | PZ-G42CN | PZ-G101CN | PZ-G102CN | PZ-G61CN | PZ-G62CN | PZ-G10RCN | PZ-G10GCN | PZ-G10BCN |
| | | PNP | PZ-G51CP | PZ-G52CP | PZ-G41CP | PZ-G42CP | PZ-G101CP | PZ-G102CP | PZ-G61CP | PZ-G62CP | PZ-G10RCP | PZ-G10GCP | PZ-G10BCP |
| | M12 pigtail quick disconnect | NPN | PZ-G51EN | PZ-G52EN | PZ-G41EN | PZ-G42EN | PZ-G101EN | PZ-G102EN | PZ-G61EN | PZ-G62EN | - | | |
| | | PNP | PZ-G51EP | PZ-G52EP | PZ-G41EP | PZ-G42EP | PZ-G101EP | PZ-G102EP | PZ-G61EP | PZ-G62EP | | | |
| Nut | Cable | Bipolar (NPN+PNP) | PZ-G51B | PZ-G52B | PZ-G41B | PZ-G42B | PZ-G101B | PZ-G102B | PZ-G61B | PZ-G62B | | | |
| | M12 connector | | PZ-G51CB | PZ-G52CB | PZ-G41CB | PZ-G42CB | PZ-G101CB | PZ-G102CB | PZ-G61CB | PZ-G62CB | | | |
| Detecting distance*1 | | | 20 m | 40 m | 1 m (30 × 30 cm white mat paper) | 300 mm (10 × 10 cm white mat paper) | 200 mm | 5 to 45 mm | 0.1 to 4.2 m (when R-2L reflector is used) | 0.1 to 1 m (when R-2L reflector is used) | 8 to 15 mm | | |
| Spot diameter | | | - | - | - | - | Approx. ϕ 5 mm (when the detecting distance is 100 mm) | Approx. ϕ 2 mm (when the detecting distance is 40 mm) | - | - | Approx. 1.5 × 4 mm (when the detecting distance is 10 mm) | | |
| Light source (LED) | | | Red LED | Infrared LED × 2 | Red LED | | | | | Infrared LED | Red LED | Green LED | Blue LED |
| Sensitivity adjustment | | | 1-turn trimmer (230 degrees) | | | | | | | | | | |
| Response time | | | 500 µs | | | | | | | | 50 µs | | |
| Operation mode | | | LIGHT-ON/DARK-ON, trimmer-selectable | | | | | | | | | | |
| Indicator (LED) | | | Transmitter: power (orange) Receiver: output (orange), stable operation (green), light (red) | | Output (orange), stable operation (green) | | | | | | | | |
| Control output | | | Open-collector 100 mA max. (30 V max.), Residual voltage 1 V max. | | | | | | | | | | |
| Protection circuit | | | Reverse-polarity protection, over-current protection, output surge absorber | | | | | | | | | | |
| Ratings | Power voltage | | 10 to 30 VDC, Ripple (P-P): ±10% max, Class 2. | | | | | | | | | | |
| | Current consumption | | Transmitter: 20 mA max. Receiver: 28 mA max. | Transmitter: 25 mA max. Receiver: 28 mA max. | 34 mA max. | | | | | | | | |
| Environmental resistance | Enclosure rating | | IEC,JEM: IP67 / NEMA: 4X,6,12 / DIN: IP69K | | | | | | | | | | |
| | Ambient light | | Incandescent lamp: 5,000 (lx) max, Sunlight: 20,000 (lx) max. | | | | | | | | | | |
| | Ambient temperature | | -20 °C to +55°C (No freezing) | | | | | | | | | | |
| | Relative humidity | | 35 to 85 % RH (No condensation) | | | | | | | | | | |
| | Vibration resistance | | 10 to 55 Hz, 1.5 mm double amplitude in X, Y, Z directions, 2 hours each | | | | | | | | | | |
| | Shock resistance | | 1000 m/s$^2$ in X, Y, Z directions, 6 times each | | | | | | | | | | |
| Interference prevention | | | 2 units (when polarizing filter attachment is used) | | 2 units (with the automatic different cycle function) | | | | | | - | | |
| Material | | | Case, M18 nut (nut type only): reinforced glass polybutylene terephthalate (PBT), Trimmer: reinforced glass polyamide (PA) Cable (Cable type / pigtail quick disconnect type only): Polyvinyl chloride (PVC), Screw (Case connection): Steel, zinc-nickel plated, Packing (Case connection): Nitrile-butadiene rubber (NBR) Connector (pigtail quick disconnect type only): Brass-nickel plated, Polybutyleneterephtalate (PBT), Polyvinyl chloride (PVC) | | | | | | | | | | |
| | Lens cover | | Polyarylate (PAR) | | | | | | Acrylic plastic (PMMA) | Polyarylate (PAR) | | | |
| Tightening torque | | | Rectangular type (side screw part): 0.5 N·m max. Nut type (front M18 part): 1.0 N·m max., (side slot part): 0.5 N·m max. | | | | | | | | | | |
| Accessory*2 | | | Instruction manual, M18 nut x 2 (nut thrubeam type), M18 nut x 1 (other nut types) | | | | | | | | | | |
| Weight | | | Rectangular cable type: Approx. 60 g (Approx. 50 g for thrubeam transmitter), Rectangular M8 connector type: Approx 10 g, rectangular M12 pigtail quick disconnect type: Approx. 30 g Nut type cable type: Approx. 65 g (Approx. 55 g for thrubeam transmitter), Nut type M12 connector type: Approx 15 g | | | | | | | | | | |

*1 The detection distance is measured with the maximum sensitivity.
*2 The cable for the connector type / pigtail quick disconnect type is sold separately. The reflector for the retro-reflective type is sold separately.

# WARRANTY

KEYENCE products are strictly factory-inspected. However, in the event of a failure, contact your nearest KEYENCE office with details of the failure.

### 1. WARRANTY PERIOD

The warranty period shall be for one year from the date that the product has been delivered to the location specified by the purchaser.

### 2. WARRANTY SCOPE

(1) If a failure attributable to KEYENCE occurs within the abovementioned warranty period, we will repair the product, free of charge. However, the following cases shall be excluded from the warranty scope.
- Any failure resulting from improper conditions, improper environments, improper handling, or improper usage other than described in the instruction manual, the user's manual, or the specifications specifically arranged between the purchaser and KEYENCE.
- Any failure resulting from factors other than a defect of our product, such as the purchaser's equipment or the design of the purchaser's software.
- Any failure resulting from modifications or repairs carried out by any person other than KEYENCE staff.
- Any failure that can certainly be prevented when the expendable part(s) is maintained or replaced correctly as described in the instruction manual, the user's manual, etc.
- Any failure caused by a factor that cannot be foreseen at a scientific/technical level at the time when the product has been shipped from KEYENCE.
- Any disaster such as fire, earthquake, and flood, or any other external factor, such as abnormal voltage, for which we are not liable.

(2) The warranty scope is limited to the extent set forth in item (1), and KEYENCE assumes no liability for any purchaser's secondary damage (damage of equipment, loss of opportunities, loss of profits, etc.) or any other damage resulting from a failure of our product.

### 3. PRODUCT APPLICABILITY

KEYENCE products are designed and manufactured as general-purpose products for general industries.

Therefore, our products are not intended for the applications below and are not applicable to them. If, however, the purchaser consults with us in advance regarding the employment of our product, understands the specifications, ratings, and performance of the product on their own responsibility, and takes necessary safety measures, the product may be applied. In this case, the warranty scope shall be the same as above.
- Facilities where the product may greatly affect human life or property, such as nuclear power plants, aviation, railroads, ships, motor vehicles, or medical equipment
- Public utilities such as electricity, gas, or water services
- Usage outdoors, under similar conditions or in similar environments

E 1040-1


**KEYENCE CORPORATION**

1-3-14, Higashi-Nakajima, Higashi-Yodogawa-ku, Osaka, 533-8555, Japan
PHONE: +81-6-6379-2211 www.keyence.com


Specifications are subject to change without notice. A7WW1-MAN-0069


Copyright (c) 2010 KEYENCE CORPORATION. All rights reserved.



11227E 1070-1 96M11227
Printed in Japan

## 7.9 CHAIN ALIGNER ASSEMBLY

### 7.9.1 GENERAL INFORMATION

The chain aligner assembly is an optional module that is generally placed at the entrance of the conveyor directly before the top trap assembly. Chain aligners are primarily for oval front/back applications. This assembly centers the product on the conveyor and straightens the product to ensure label accuracy. Chain aligners are controlled with AC motors and a single AC drive located in the electrical enclosure.

### 7.9.2 ADJUSTMENTS

The chain aligner assembly is adjusted in and out or up and down by rotating the knobs clockwise or counter clockwise. Lock the assembly in place with the ratchet handles on the front and side of the assembly.

**CAUTION**

**Do not make any adjustments when assembly or conveyor are running. Read and understand manual before making any adjustments.**

**ASSEMBLY TITLE: CHAIN ALIGNERS**

**GENERAL FUNCTION:**

-Provides product alignment before label application.

**SET-UP AND ADJUSTMENTS:**

-VERTICAL ADJUSTMENT: Loosen clamp lever and turn adjusting rod with ratchet handle. Tighten clamp lever when desired position is obtained.

-HORIZONTAL ADJUSTMET: loosen clamp lever and turn adjusting rod with ratchet handle. Tighten clamp lever when desired position is obtained.

**MAINTENANCE:**

-Clean chain aligners frequently. Grease all fittings after every forty hours of operation. Use lithium grease only.

**TROUBLESHOOTING:**

| PROBLEM | WHAT TO DO |
|---|---|
| -Products do not align | -Adjust horizontally to increase pressure on the product. |
| -Products will not travel through aligners. | -Adjust horizontally to apply less pressure to the product. |

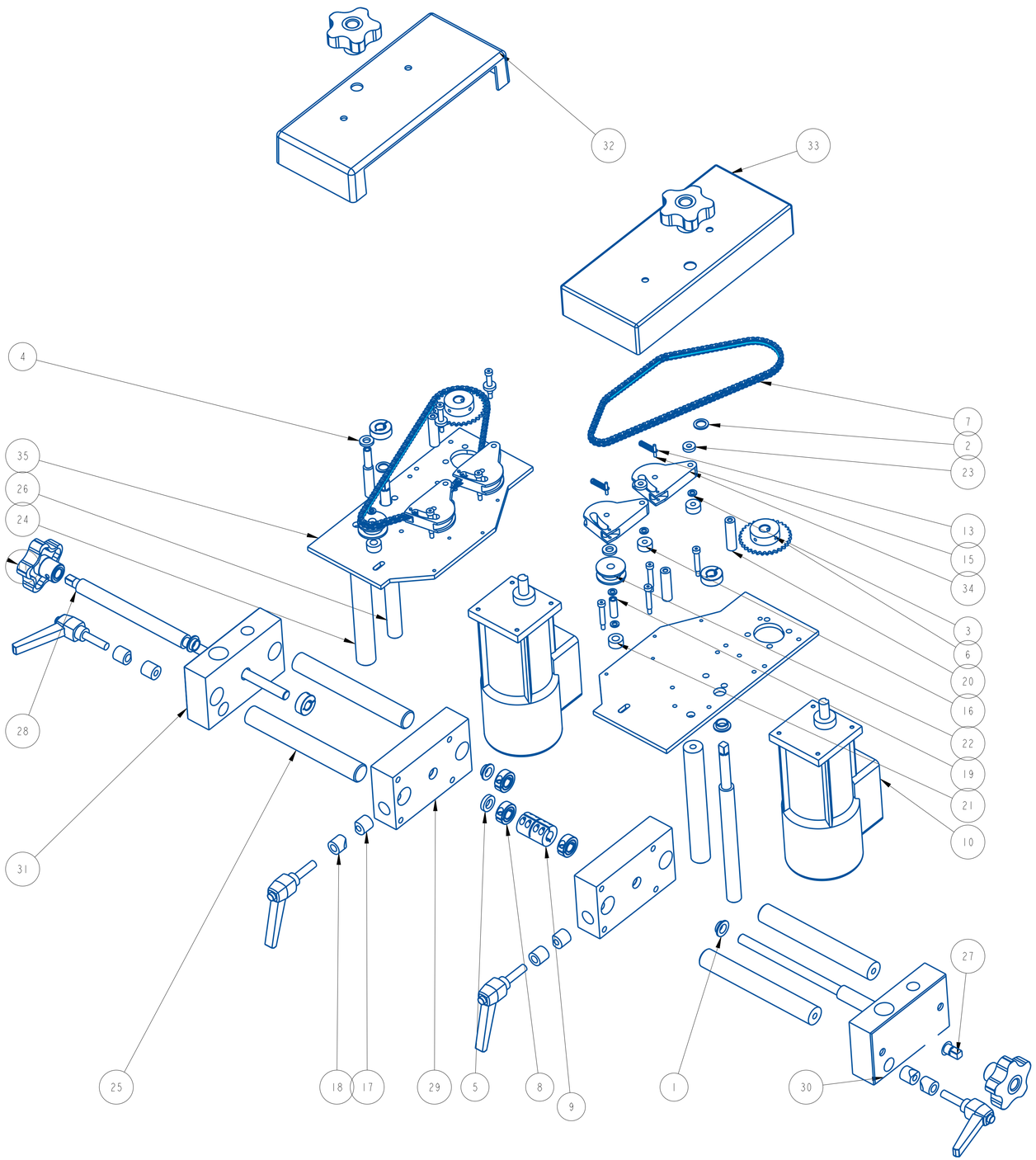


| ITEM | QTY | PART NO. | DESCRIPTION | PARENT ITEM |
|---|---|---|---|---|
| 1 | 6 | 131086-000 | BEARING, FLANGE | 20811-027 |
| 2 | 2 | 151004-000 | BEARING, THRUST WASHER | 20811-027 |
| 3 | 8 | 151013-000 | BEARING, THRUST WASHER | 20811-027 |
| 4 | 2 | 151021-000 | BEARING, THRUST WASHER | 20811-027 |
| 5 | 2 | 151050-000 | BEARING, THRUST WASHER | 20811-027 |
| 6 | 2 | 302052-000 | SPROCKET - 25BS32HT-1/2"B-K&S | 20811-027 |
| 7 | 2 | 361124-000 | CHAIN, 1/4 PITCH | 20811-027 |
| 8 | 6 | 361169-000 | COLLAR, 1/2 IN. ID ONE-PIECE CLAMP | 20811-027 |
| 9 | 1 | 361259-000 | COUPLING, ONE PIECE CLAMP-ON | 20811-027 |
| 10 | 2 | 413022-000 | GEARMOTOR 94 RPM | 20811-027 |
| 11 | 4 | 801332-000 | LOBE KNOB W/ ORANGE CENTER | 20811-027 |
| 12 | 4 | 801805-000 | CLAMPING LEVER | 20811-027 |
| 13 | 4 | 811187-000 | SPRING, EXTENSION | 20811-027 |
| 14 | 8 | 841551-000 | SHOULDER BOLT | 20811-027 |
| 15 | 4 | 871116-000 | ROLL PIN | 20811-027 |
| 16 | 4 | A20006-000 | ROCKER ARM MOUNTING SPACER | 20811-027 |
| 17 | 4 | A20688-000 | LOCKING CLAMP | 20811-027 |
| 18 | 4 | A20689-000 | LOCKING CLAMP | 20811-027 |
| 19 | 2 | A20735-000 | IDLER SHAFT | 20811-027 |
| 20 | 4 | A20736-001 | GUARD SPACER | 20811-027 |
| 21 | 2 | A20737-000 | IDLER SPACER | 20811-027 |
| 22 | 2 | A20738-000 | IDLER PULLEY | 20811-027 |
| 23 | 4 | A20739-000 | ROCKER ARM SPACER | 20811-027 |
| 24 | 2 | A21427-000 | GUIDE ROD | 20811-027 |
| 25 | 4 | A21428-027 | GUIDE ROD | 20811-027 |
| 26 | 2 | A21440-000 | ADJUSTING SCREW | 20811-027 |
| 27 | 1 | A24656-027 | ADJUSTING SCREW | 20811-027 |
| 28 | 1 | A24657-027 | ADJUSTING SCREW | 20811-027 |
| 29 | 2 | A24752-011 | HORIZONTAL MTG. BLOCK, CHAIN ALIGNER | 20811-027 |
| 30 | 1 | B21807-010 | VERTICAL ADJUSTMENT BLOCK | 20811-027 |
| 31 | 1 | B21807-011 | VERTICAL ADJUSTMENT BLOCK | 20811-027 |
| 32 | 1 | C20020-000 | CHAIN ALIGNER GUARD | 20811-027 |
| 33 | 1 | C20020-001 | CHAIN ALIGNER COVER | 20811-027 |
| 34 | 4 | C20138-000 | ROCKER ARM | 20811-027 |
| 35 | 2 | C20832-020 | CHAIN ALIGNER MOUNTING PLATE | 20811-027 |

| REV | DATE | DESCRIPTION | BY |
|---|---|---|---|
| A | Aug-28-24 | NEW DRAWING | TAZ |

THIS IS A PRO-ENGINEER DOCUMENT AND MAY NOT BE MODIFIED MANUALLY

UNLESS OTHERWISE SPECIFIED
DIMENSIONAL TOLERANCE
X ± .1
XX ± .01
XXX ± .005
ANGLES ± 30'
SURFACE FINISH 125
BREAK ALL EDGES .005/.015
CORNER RADIUS .010/.030"
ALL ANGLES ARE 90°

QUADREL LABELING SYSTEMS
7670 JENTHER DRIVE
MENTOR, OHIO 44060
(440) 602-4700

SCALE: 5/16
DATE: Aug-28-24
DRW BY: TAZ
CHK BY:12/16/2024-SEM
APPR BY:

SELF POWERED CHAIN ALIGNER ASSEMBLY

MAT'L

20811-027

SHEET 1 OF 2

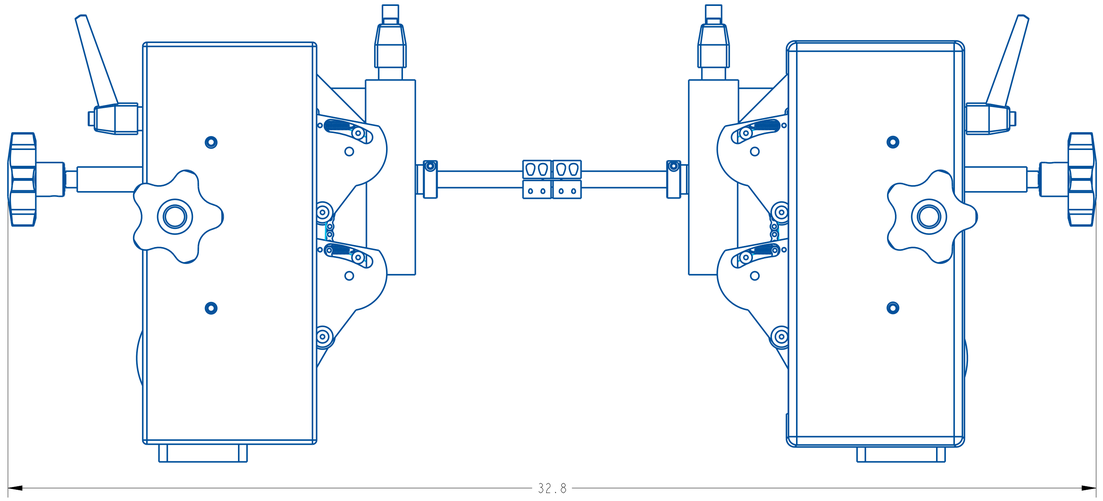


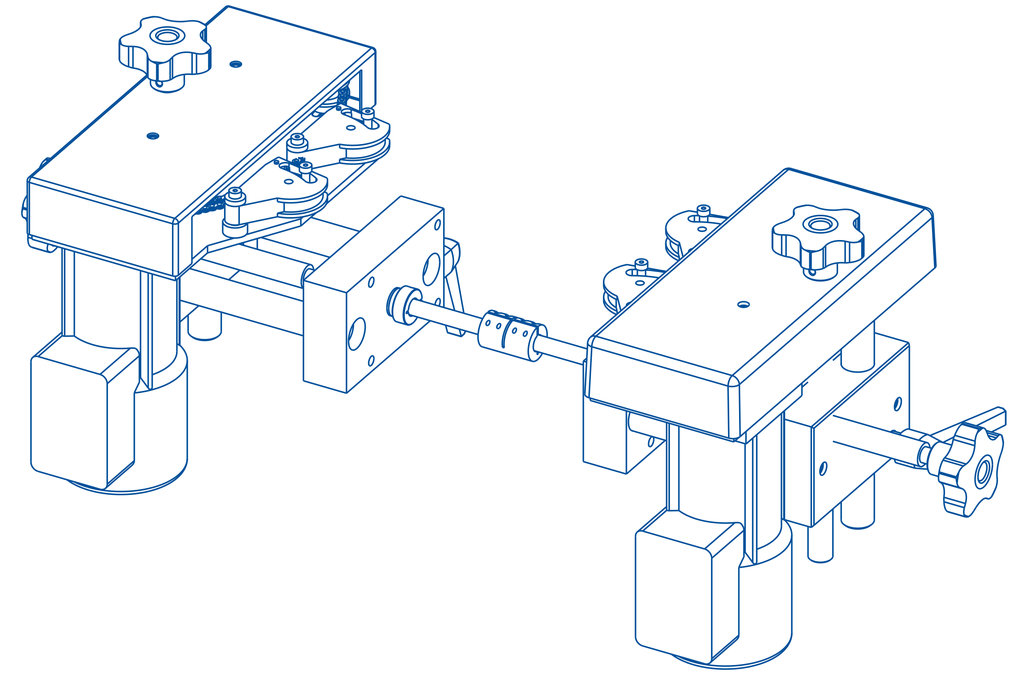

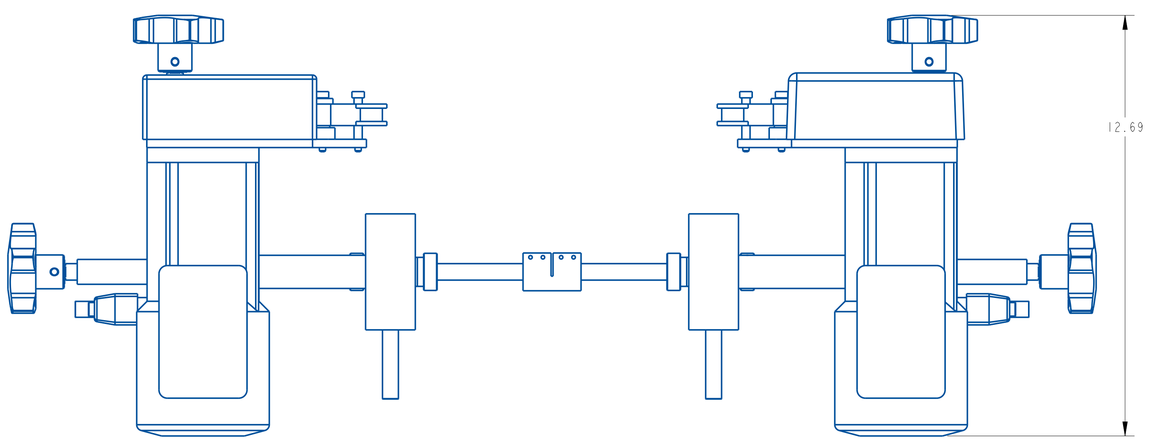


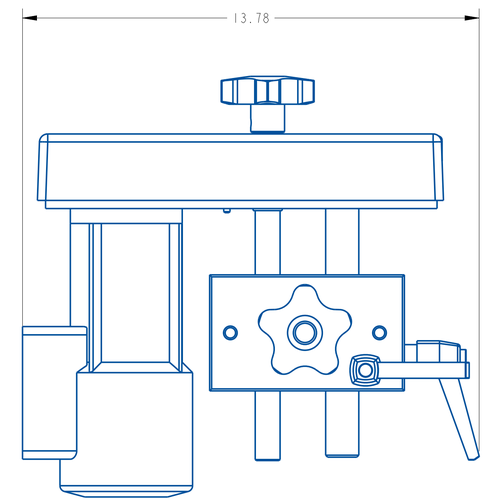


| REV | DATE | DESCRIPTION | BY |
|---|---|---|---|
| A | Aug-28-24 | NEW DRAWING | TAZ |

THIS IS A PRO-ENGINEER DOCUMENT AND MAY NOT BE MODIFIED MANUALLY

UNLESS OTHERWISE SPECIFIED
DIMENSIONAL TOLERANCE
X ± .1
XX ± .01
XXX ± .005
ANGLES ± 30'

SURFACE FINISH 125
BREAK ALL EDGES .005/.015
CORNER RADIUS .010/.030
ALL ANGLES ARE 90°

QUADREL LABELING SYSTEMS
7670 JENTHER DRIVE
MENTOR, OHIO 44060
(440) 602-4700

SCALE: 7/16
DATE: Aug-28-24
DRW BY: TAZ
CHK BY: 12/16/2024-SEM
APPR BY:

SELF POWERED CHAIN ALIGNER ASSEMBLY

MAT'L

20811-027

SHEET 2 OF 2

# Electronics

# Econoline

| | | | |
|---|---|---|---|
| -- | B21820-030E | 1 | Enclosure, Modification |
| -- | 222360-002 | 1 | Enclosure, Steel, 30 x 24 x 8 |
| -- | B21820-030P | 1 | Panel, Modification |
| -- | 222360-001 | 1 | Panel, SCE30P24 |
| -- | 241061-000 | 2 | Fuse, 1A, 1.25 x .25 |
| -- | 241053-000 | 2 | Fuse, 3A, 1.25 x .25 |
| -- | 241060-000 | 12 | Fuse, 5A, 1.25 x .25 |
| -- | 241187-000 | 2 | Fuse, 15A, CC |
| -- | 251799-000 | 5 | End Cap, ST1.5-4 |
| -- | 251795-000 | 8 | End Terminal |
| -- | 251798-000 | 2 | Partition Plate, ST1.5 - 4 |

| | | | |
|---|---|---|---|
| -- | 251855-000 | 3 | 2-Pole Jumper, ST1.5 |
| -- | 251856-000 | 1 | 3-Pole Jumper, ST1.5 |
| -- | 251859-000 | 2 | 10-Pole Jumper, ST1.5 |
| -- | 251801-000 | 2 | 2-Pole Jumper, ST2.5 |
| -- | 251804-000 | 2 | 5-Pole Jumper, ST2.5 |
| -- | 251854-000 | 8 | ST1.5 Ground Terminal Block |
| -- | 251853-000 | 50 | ST1.5 Terminal Block |
| -- | 251796-000 | 4 | ST2.5 Ground Terminal |
| -- | 251846-000 | 1 | ST4 Ground Terminal |
| -- | 251797-000 | 12 | ST2.5 Terminal Block |

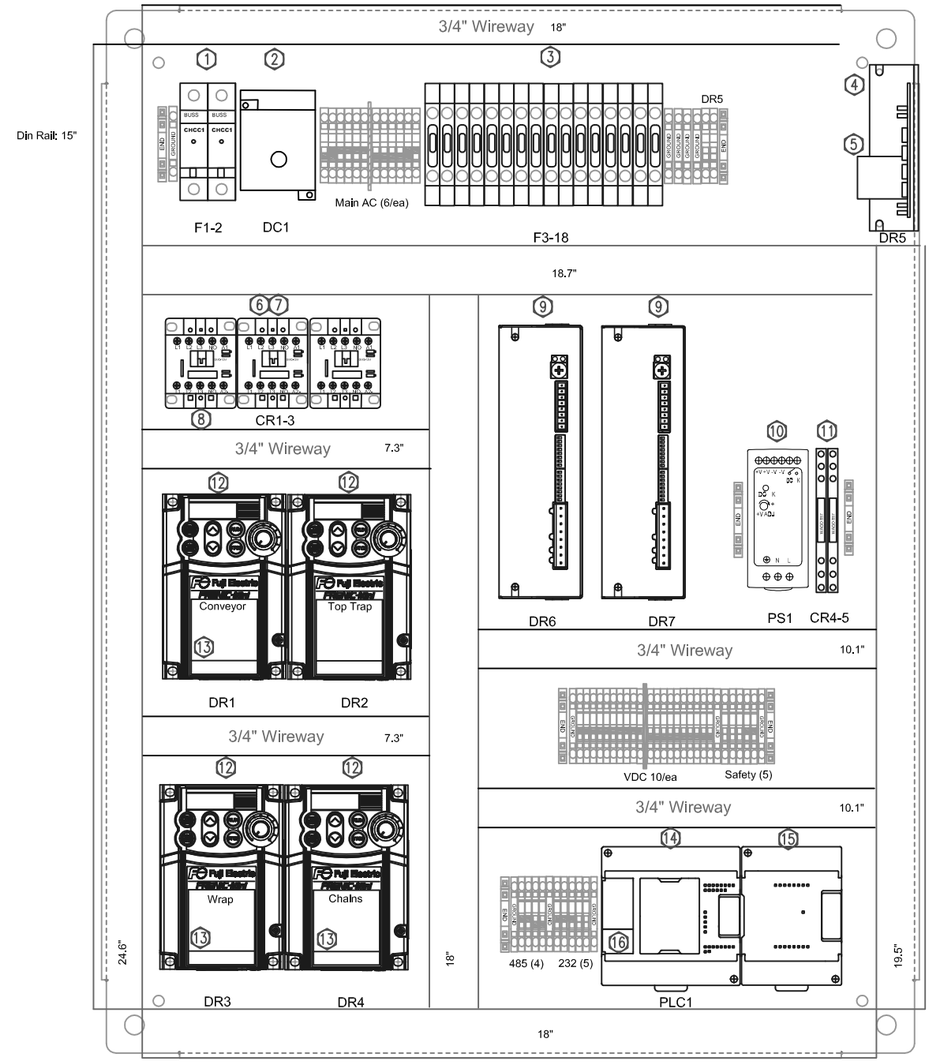


1" Wireway Unless Noted
Component Hardware: 8-32 SHCS
Wireway/Din Rail Hardware: 8-32 BHCS

| | | | |
|---|---|---|---|
| 16 | 262821-000 | 1 | PLC 232 Cable, 1ft |
| 15 | 221720-005 | 1 | PLC Expansion, KV-N8EXR 8 In, 8 Out |
| 14 | 221717-001 | 1 | PLC, Keyence KV-N24DTP |
| 13 | 252057-000 | 3 | RJ45 Connector |
| 12 | 411458-007 | 4 | AC Drive, Fuji Mini, 120V, 1/2 HP |
| 12 | 411458-000 | 4 | AC Drive, Fuji Mini, 220V, 1/2 HP |
| 11 | 202628-000 | 2 | Relay, 24V, SPDT |
| 10 | 211528-005 | 1 | Power Supply, 24V, 2.5A |
| 9 | 412476-000 | 2 | Stepper Drive, Applied Motion STRAC8 |
| 8 | 202620-000 | 1 | Contactor Aux Block, 2 NO |
| 7 | 202607-000 | 3 | Contactor Surge Suppressor |
| 6 | 202604-000 | 3 | Contactor, 24V, 4 NO |
| 5 | 263824-000 | 1 | Connector, 2 Pin, DC Inhibit |
| 4 | 411457-000 | 1 | DC Drive, Single Kit |
| 3 | 251788-001 | 16 | Fuse Holder, 300V AC, Indicating |
| 2 | 272117-003 | 1 | Disconnect, 25A Base Mount |
| 1 | 241285-000 | 2 | Fuse Holder, CC |

## Junction Box Terminals

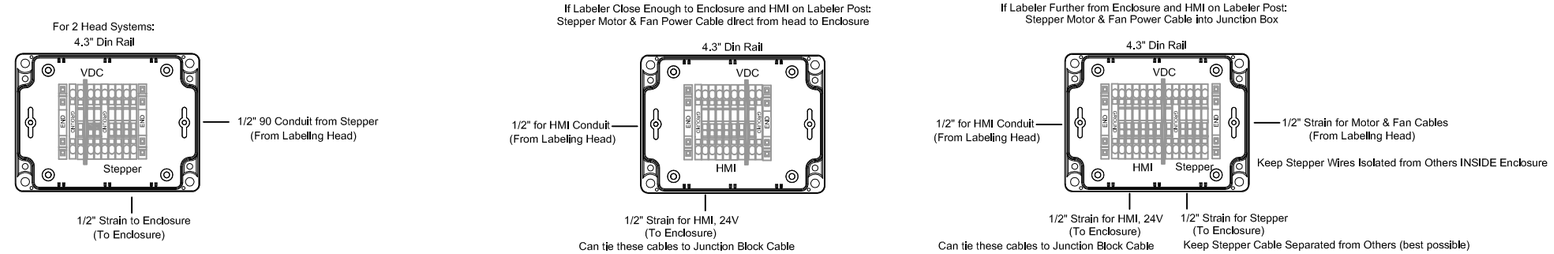


UNLESS OTHERWISE SPECIFIED
DIMENSIONAL TOLERANCE
.X ± .XTOL
.XX ± .XXTOL
.XXX ± .XXXTOL
ANGLES ± ANGTOL
SURFACE FINISH FINISHTOL
BREAK ALL EDGES .005/.015
CORNER RADIUS .010/.030

QUADREL LABELING SYSTEMS
7670 Jenther Drive
Mentor, Ohio 44060
(440) 602-4700

SCALE: 1:1
DATE: 30AUG2024
DRAWN BY: CAV
REVISED:

Layout, Econoline

MAT'L 21820-xxx-000

B21820-037

# Main Power Interlock Page 1

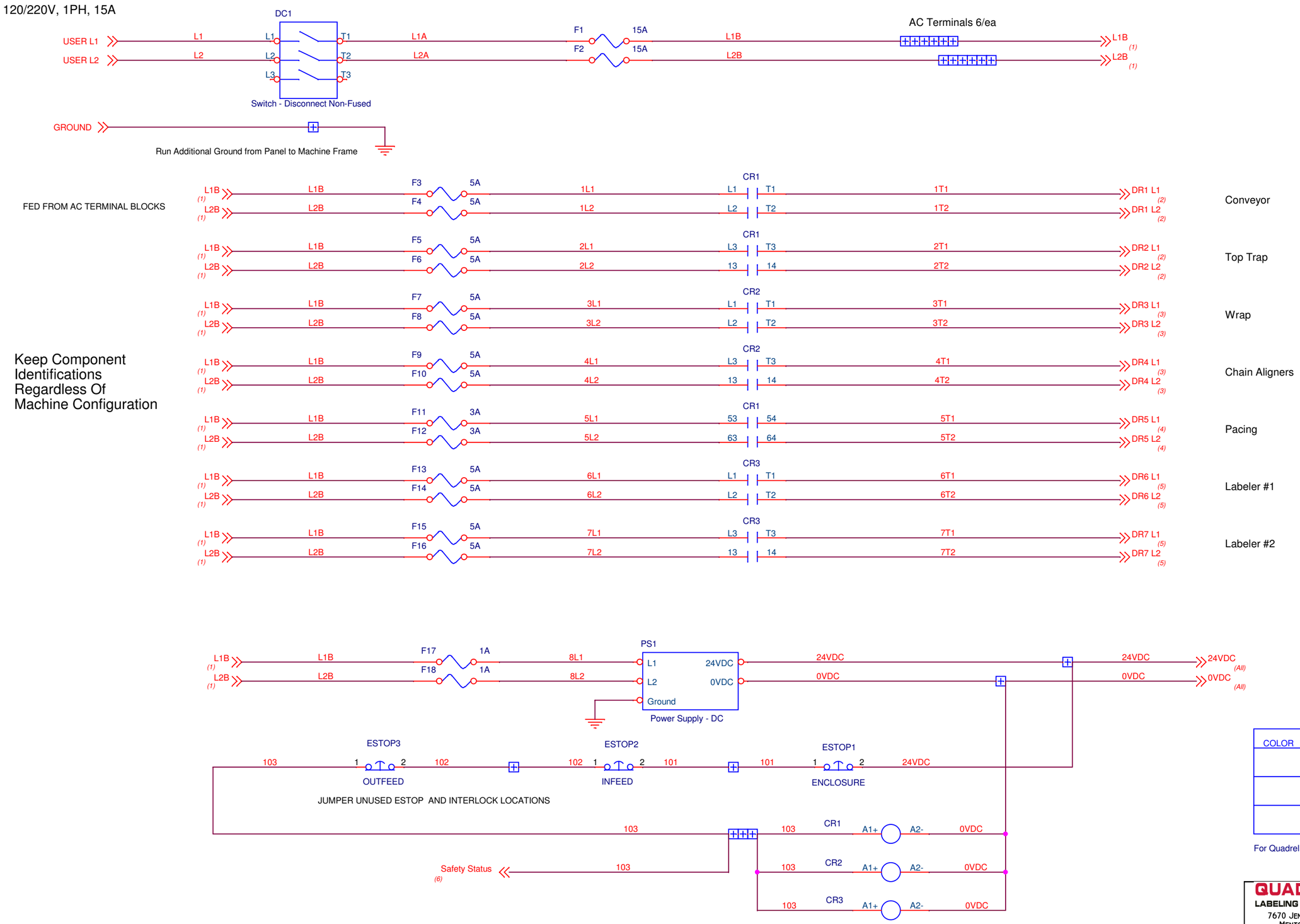


| COLOR | TECHNICIAN | DATE |
|---|---|---|
| | | |
| | | |
| | | |

For Quadrel Assembly Use

WIRING (UNLESS NOTED):
AC WIRING: 14AWG BLACK
+VDC/SIGNALS: 18AWG BLUE
0VDC: 18AWG WHITE/BLUE
GROUND: 14AWG GREEN/YELLOW

QUADREL LABELING SYSTEMS
7670 Jenther Dr.
Mentor, OH
44060

| REV | DESCRIPTION | BY | DATE |
|---|---|---|---|
| D | Printer Relays | CAV | 27AUG2025 |
| C | Updated Shielding | CAV | 10FEB2025 |
| B | Hugger Options | CAV | 30JAN2025 |
| A | Release | CAV | 19NOV2024 |
| - | Pre Release | CAV | 03SEP2024 |

Drawn By: CAV

Title: ECONOLINE

Schematic # SB21820-006

Rev D

Date: Wednesday, August 27, 2025

Sheet 01 of 07

# Drives: Conveyor Top Trap Page 2

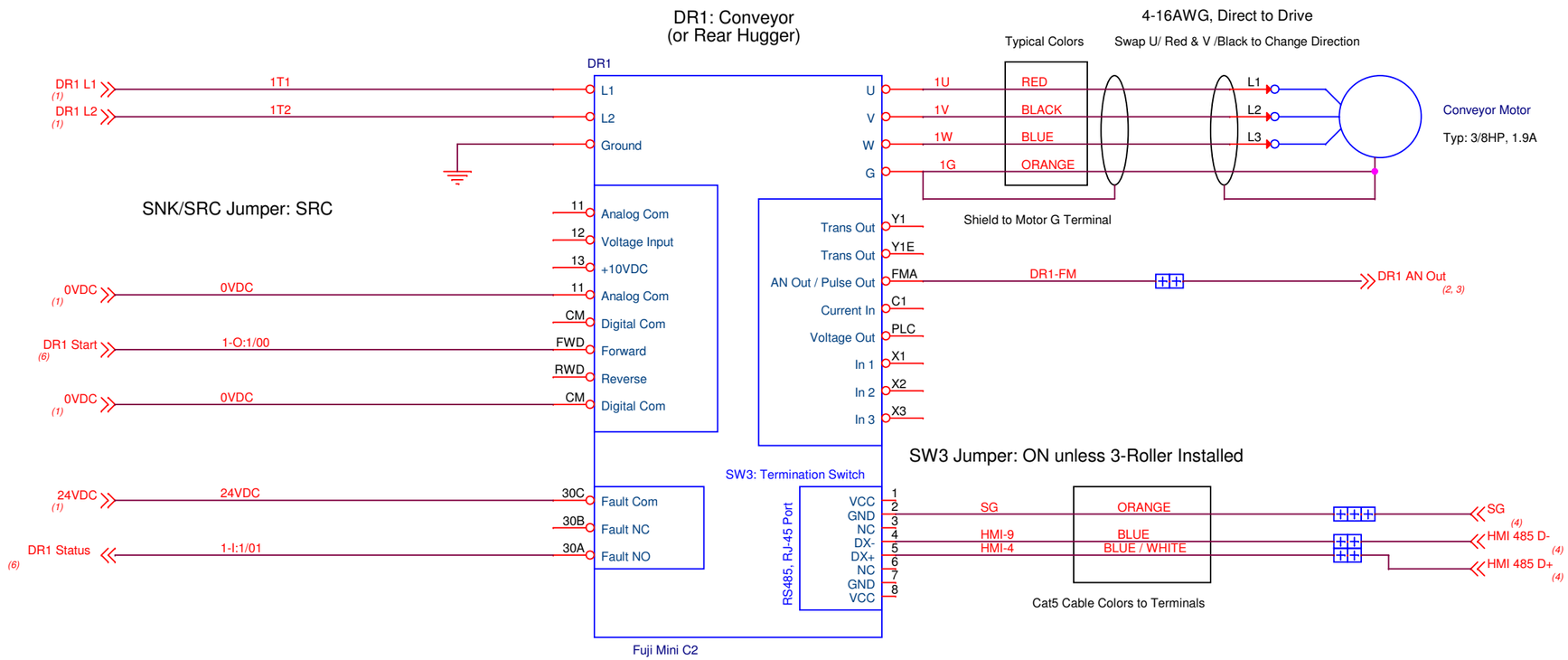


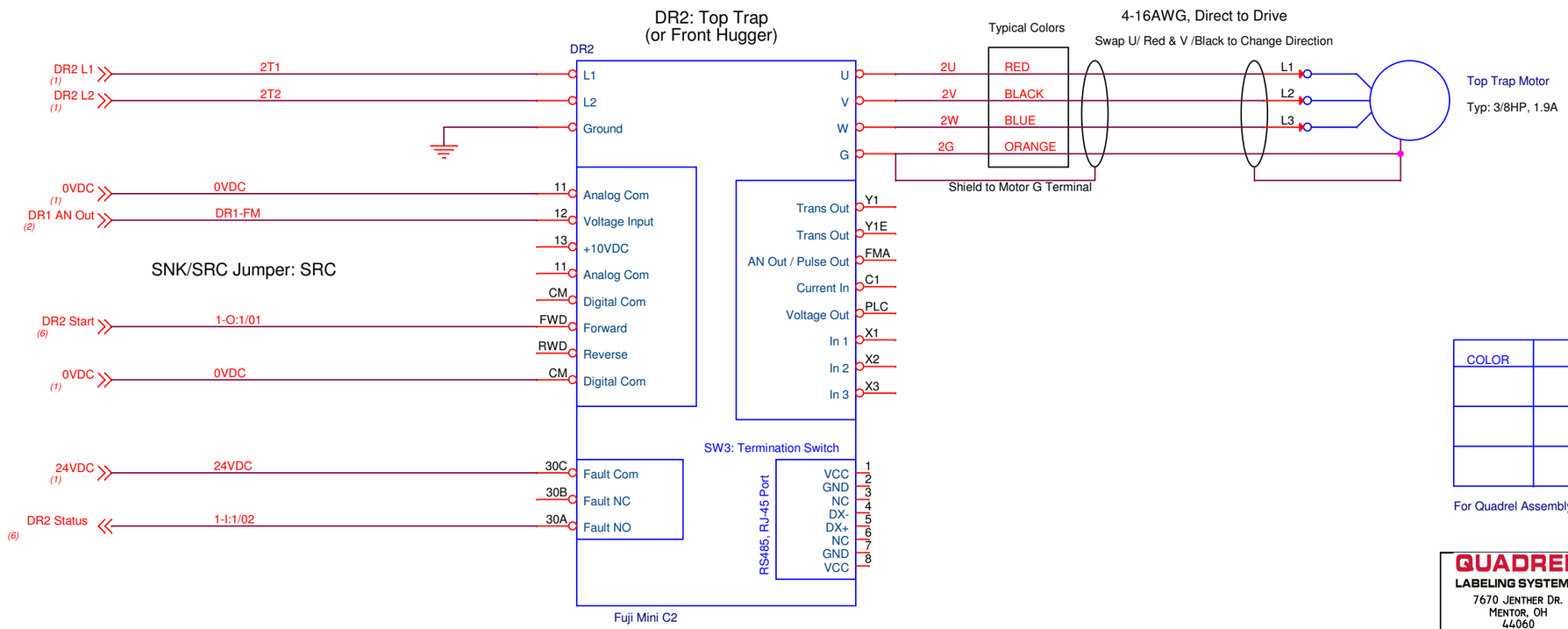


| COLOR | TECHNICIAN | DATE |
|---|---|---|
| | | |
| | | |
| | | |

For Quadrel Assembly Use

QUADREL LABELING SYSTEMS
7670 Jenther Dr.
Mentor, OH
44060

| REV | DESCRIPTION | BY | DATE |
|---|---|---|---|
| D | Printer Relays | CAV | 27AUG2025 |
| C | Updated Shielding | CAV | 10FEB2025 |
| B | Hugger Options | CAV | 30JAN2025 |
| A | Release | CAV | 19NOV2024 |
| - | Pre Release | CAV | 03SEP2024 |

Drawn By: CAV

Title: CONVEYOR AND TOP TRAP

Schematic # SB21820-006

Rev D

Date: Wednesday, August 27, 2025

Sheet 02 of 07

# Drives: Wrap Chains Page 3

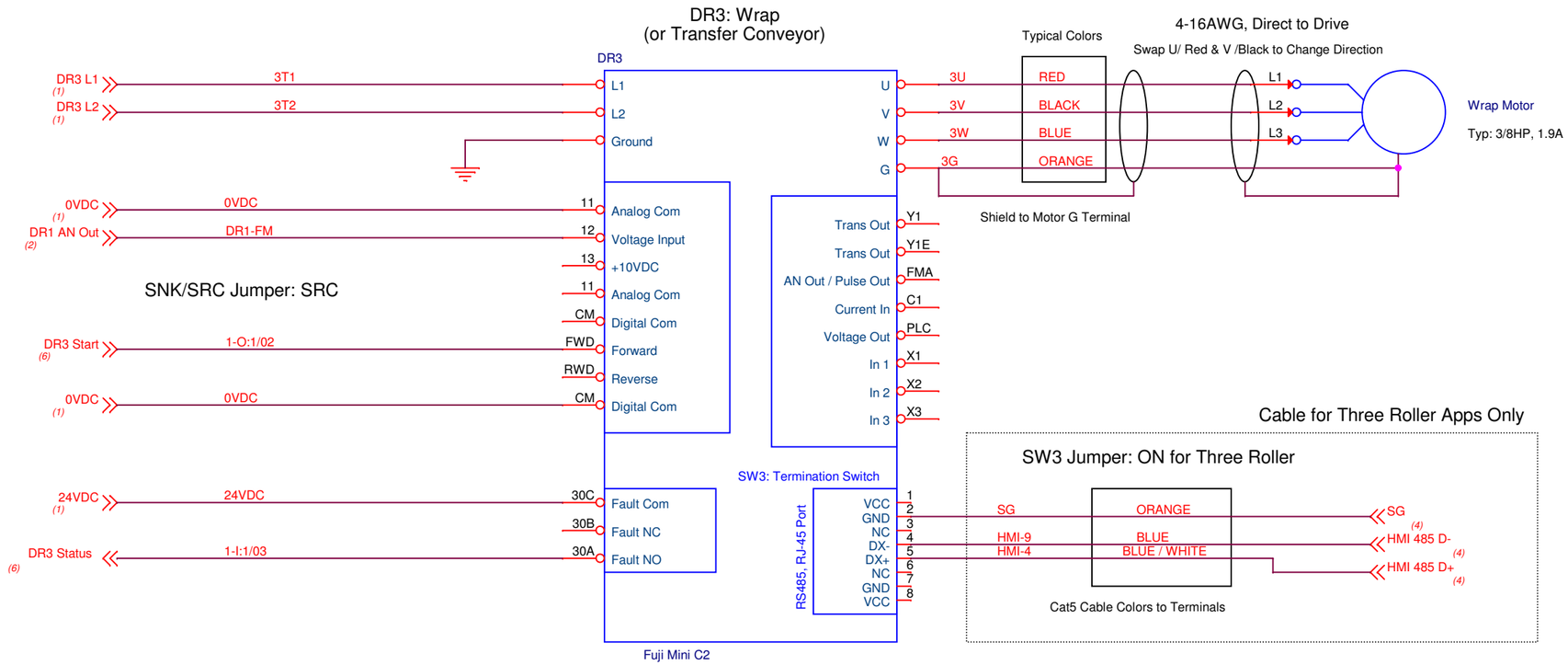


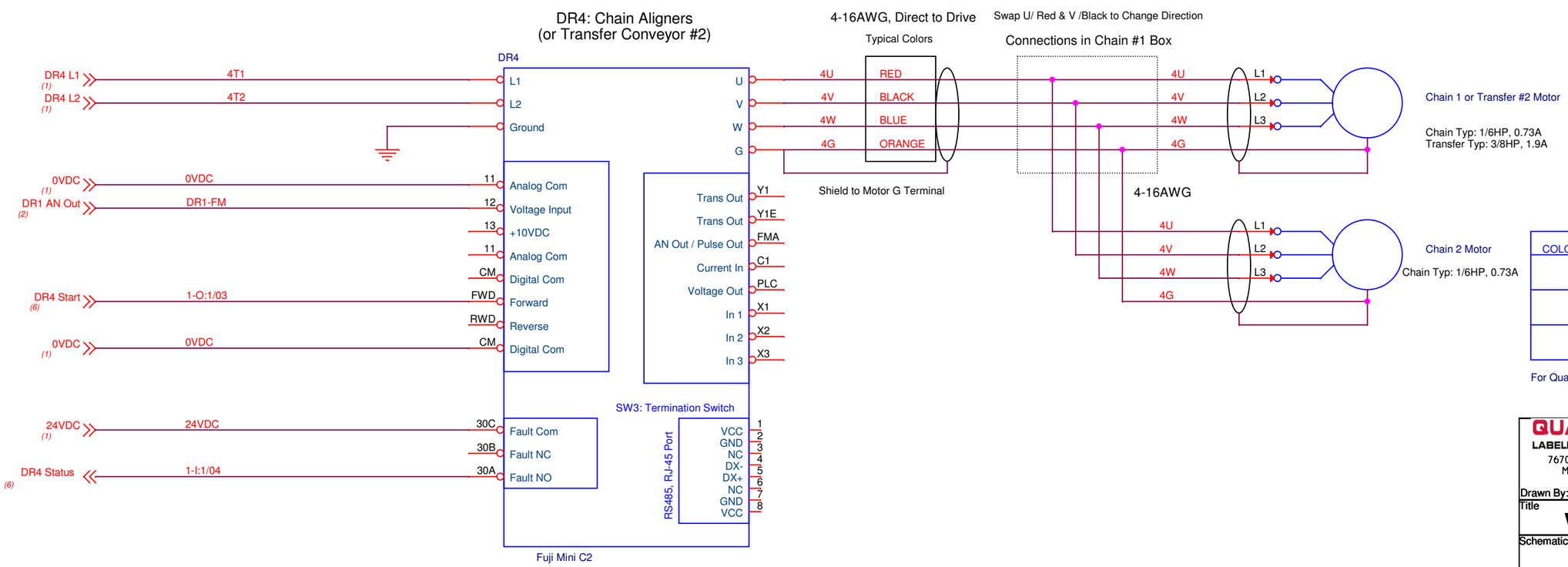


| COLOR | TECHNICIAN | DATE |
|---|---|---|
| | | |
| | | |
| | | |

For Quadrel Assembly Use

QUADREL LABELING SYSTEMS
7670 Jenther Dr.
Mentor, OH
44060

| REV | DESCRIPTION | BY | DATE |
|---|---|---|---|
| D | Printer Relays | CAV | 27AUG2025 |
| C | Updated Shielding | CAV | 10FEB2025 |
| B | Hugger Options | CAV | 30JAN2025 |
| A | Release | CAV | 19NOV2024 |
| - | Pre Release | CAV | 03SEP2024 |

Drawn By: CAV

Title: WRAP, CHAIN ALIGNERS

Schematic # SB21820-006

Rev D

Date: Wednesday, August 27, 2025

Sheet 03 of 07

Pacing, HMI
Page 4

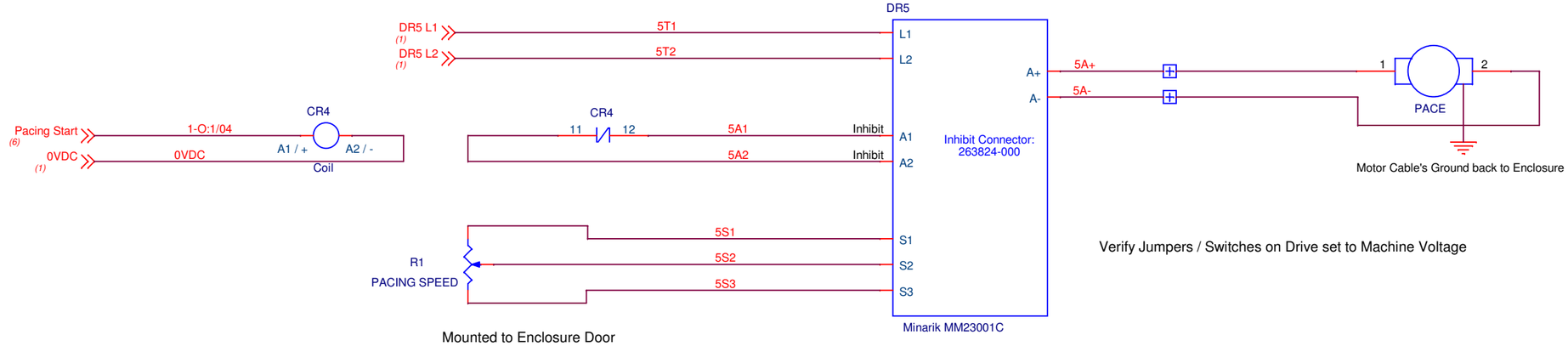


## For Steel Enclosure (Mounted off of Top Trap or Adjustable Arms)

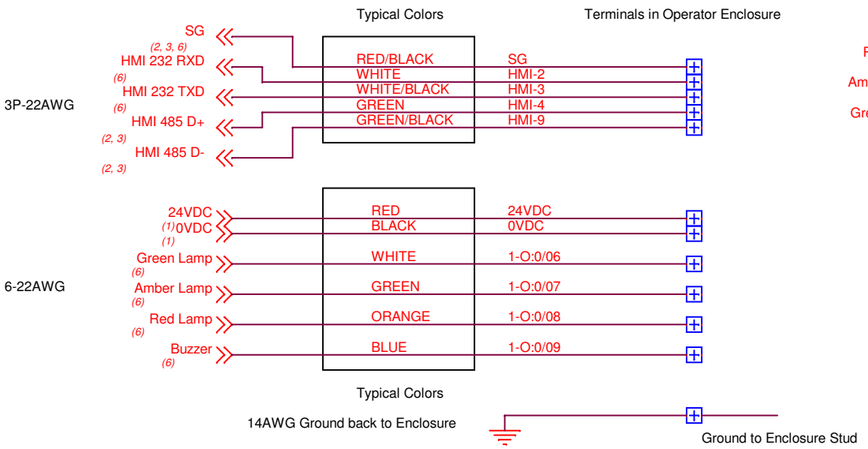


## Stack Lamp Option
(Would be connected to terminals when sold & installed)

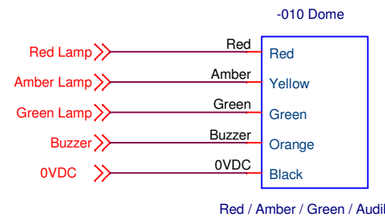


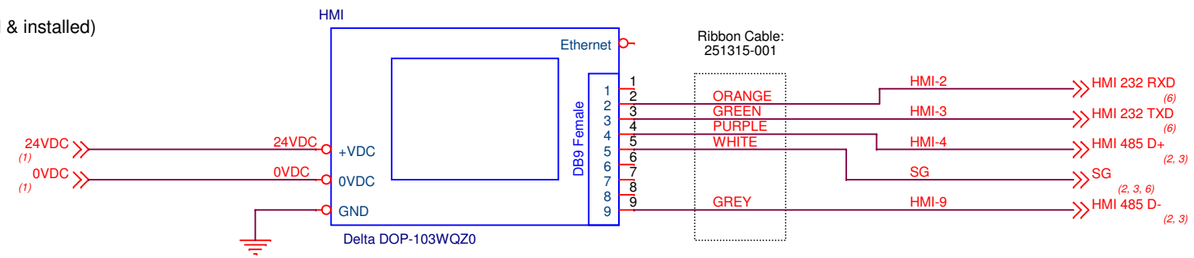


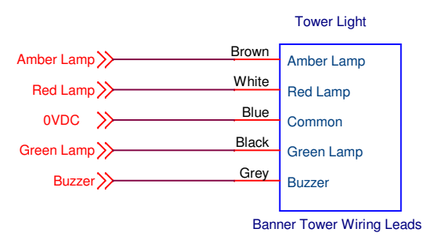


## For Plastic Enclosure (Mounted on Labeler Sideplate Post, Single Head Systems)

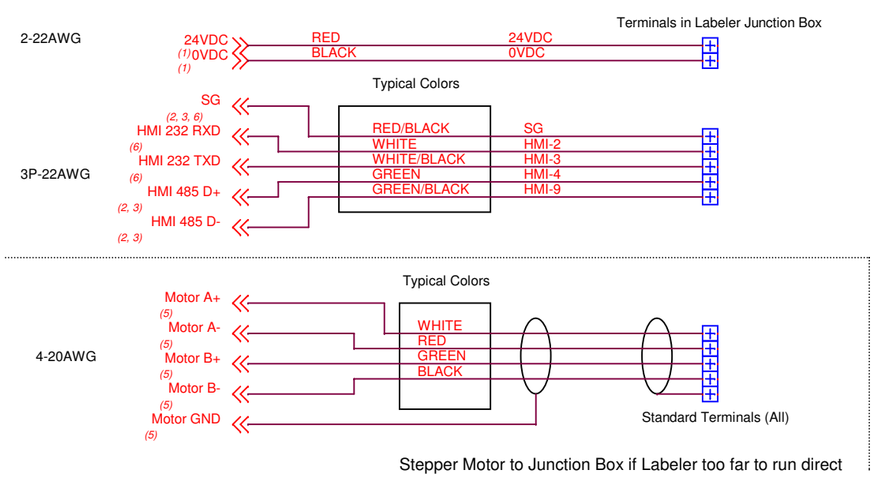


## Stack Lamp Option
(Cable with Female Connector would be sold & installed with Lamp)

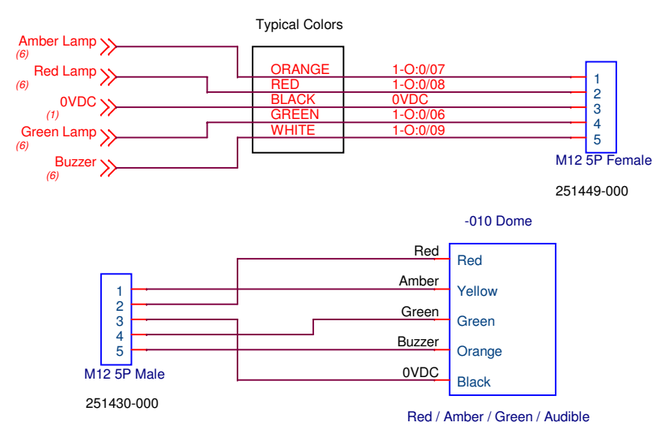


| COLOR | TECHNICIAN | DATE |
|---|---|---|
| | | |
| | | |
| | | |

For Quadrel Assembly Use

QUADREL LABELING SYSTEMS
7670 Jenther Dr.
Mentor, OH
44060

| REV | DESCRIPTION | BY | DATE |
|---|---|---|---|
| D | Printer Relays | CAV | 27AUG2025 |
| C | Updated Shielding | CAV | 10FEB2025 |
| B | Hugger Options | CAV | 30JAN2025 |
| A | Release | CAV | 19NOV2024 |
| - | Pre Release | CAV | 03SEP2024 |

Drawn By: CAV

Title: PACING, HMI

Schematic # SB21820-006

Rev D

Date: Wednesday, August 27, 2025

Sheet 04 of 07

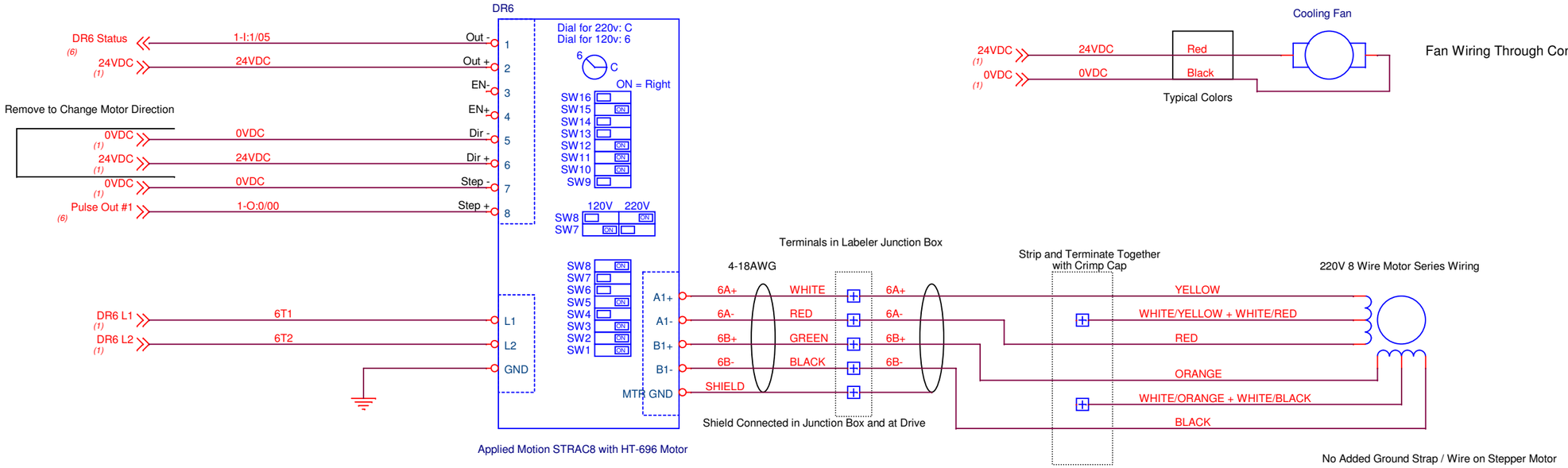





Fan Wiring Through Conduit with Motor Cable

120V: 8 Wire Motor Parallel Wiring

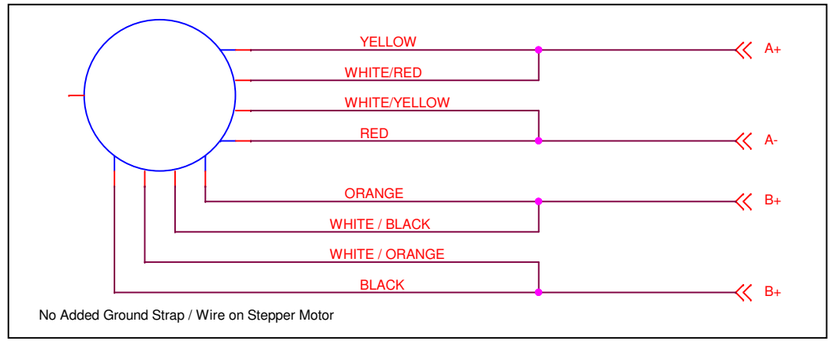


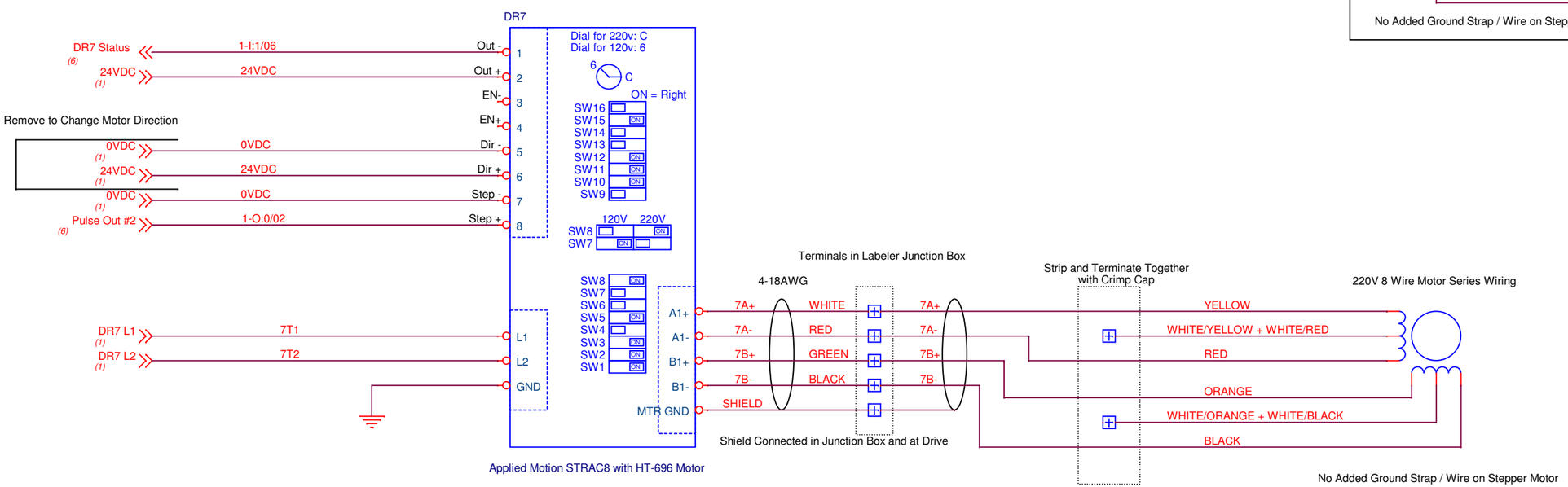


| COLOR | TECHNICIAN | DATE |
|---|---|---|
| | | |
| | | |
| | | |

For Quadrel Assembly Use

QUADREL
LABELING SYSTEMS
7670 JENTHER DR.
MENTOR, OH
44060

Drawn By: CAV

| REV | DESCRIPTION | BY | DATE |
|---|---|---|---|
| D | Printer Relays | CAV | 27AUG2025 |
| C | Updated Shielding | CAV | 10FEB2025 |
| B | Hugger Options | CAV | 30JAN2025 |
| A | Release | CAV | 19NOV2024 |
| - | Pre Release | CAV | 03SEP2024 |

Title
# LABELER DRIVES

Schematic # SB21820-006

Rev D

Date: Wednesday, August 27, 2025

Sheet 05 of 07

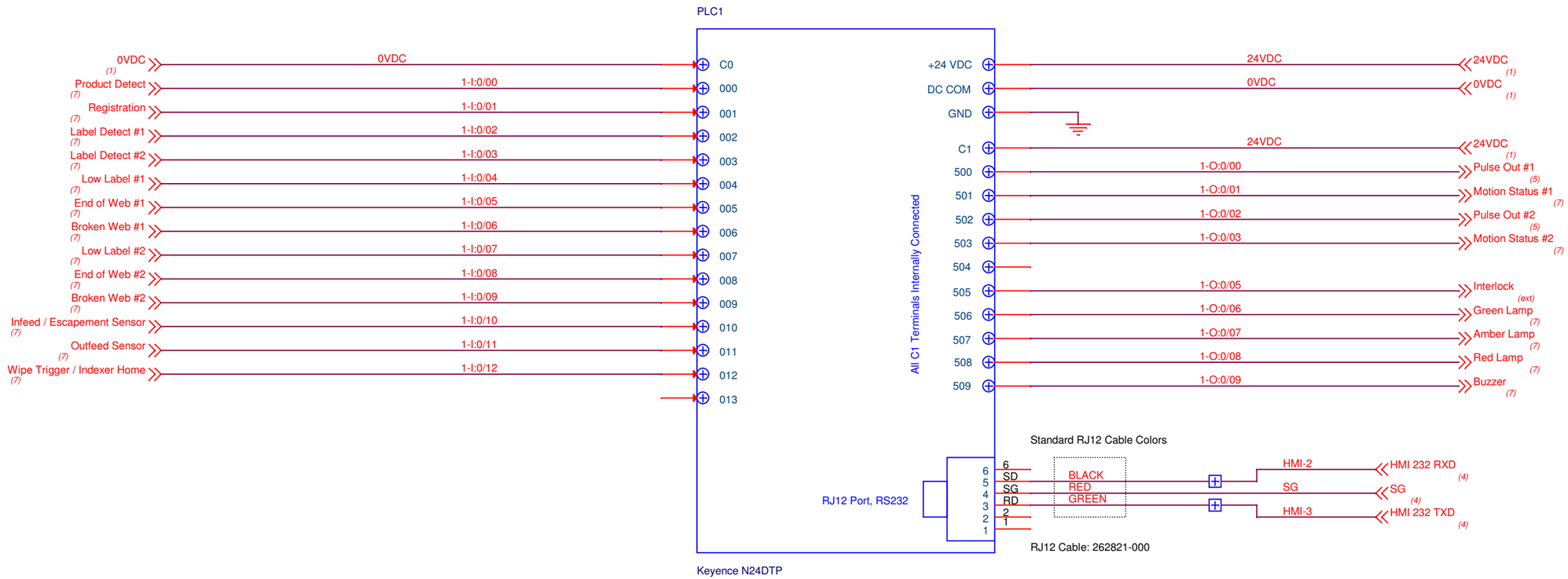


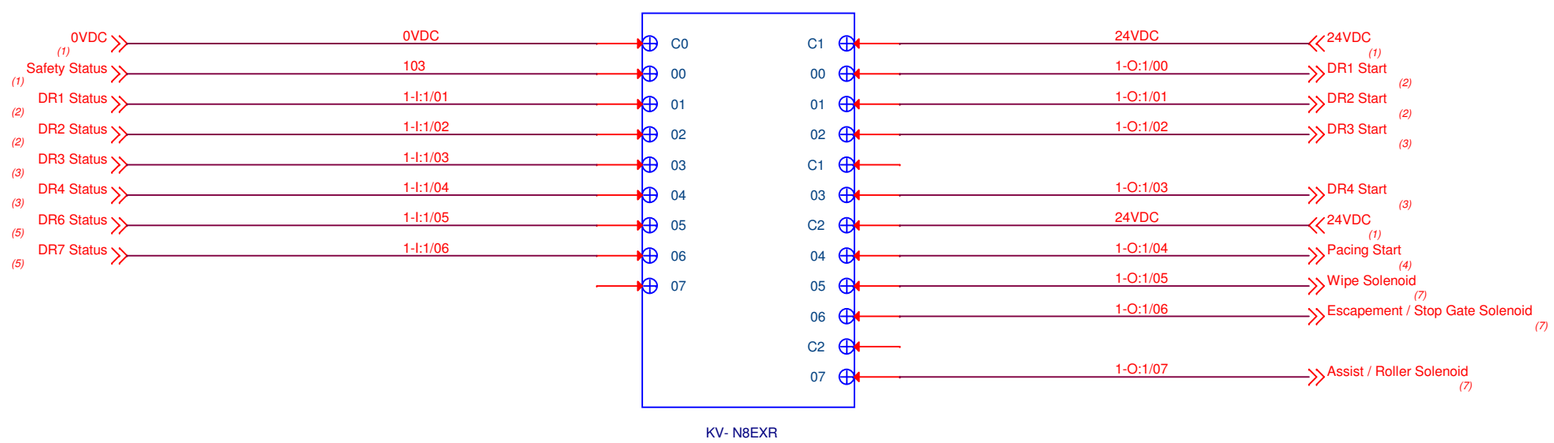


| COLOR | TECHNICIAN | DATE |
|---|---|---|
| | | |
| | | |
| | | |

For Quadrel Assembly Use

QUADREL
LABELING SYSTEMS
7670 JENTHER DR.
MENTOR, OH
44060

| REV | DESCRIPTION | BY | DATE |
|---|---|---|---|
| D | Printer Relays | CAV | 27AUG2025 |
| C | Updated Shielding | CAV | 10FEB2025 |
| B | Hugger Options | CAV | 30JAN2025 |
| A | Release | CAV | 19NOV2024 |
| - | Pre Release | CAV | 03SEP2024 |

Drawn By: CAV

Title: PLC

Schematic #: SB21820-006

Rev: D

Date: Wednesday, August 27, 2025

Sheet 06 of 07

# Sensors
Page 7

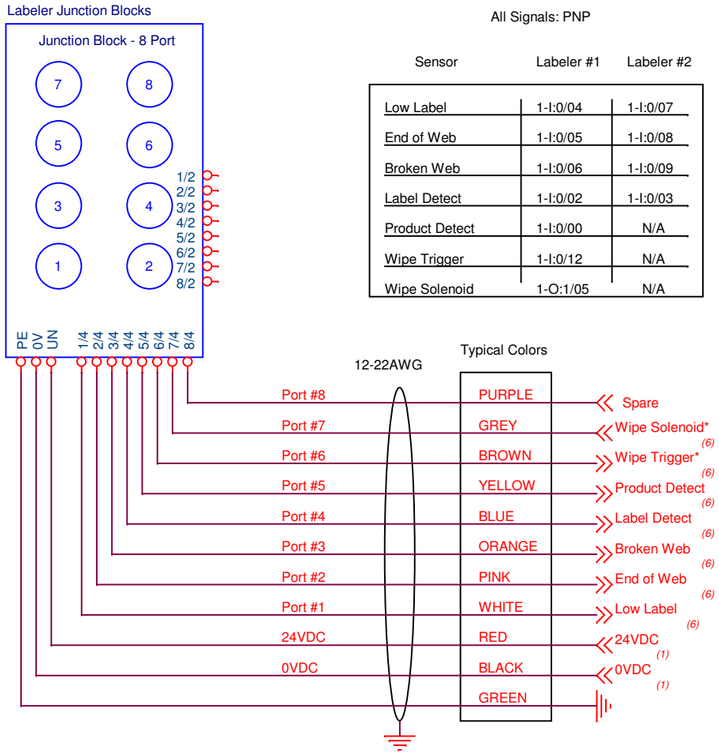


All Signals: PNP

| Sensor | Labeler #1 | Labeler #2 |
|---|---|---|
| Low Label | 1-I:0/04 | 1-I:0/07 |
| End of Web | 1-I:0/05 | 1-I:0/08 |
| Broken Web | 1-I:0/06 | 1-I:0/09 |
| Label Detect | 1-I:0/02 | 1-I:0/03 |
| Product Detect | 1-I:0/00 | N/A |
| Wipe Trigger | 1-I:0/12 | N/A |
| Wipe Solenoid | 1-O:1/05 | N/A |

Ground Labeler Sideplate to Machine Frame

*Used as Spares if 3 Roller Indexer Installed

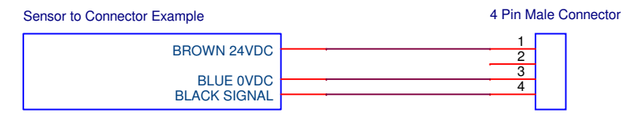


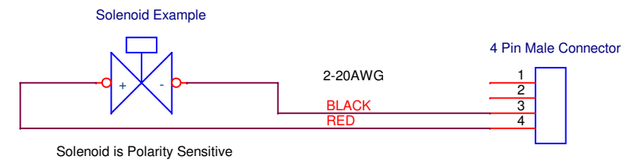


Solenoid is Polarity Sensitive

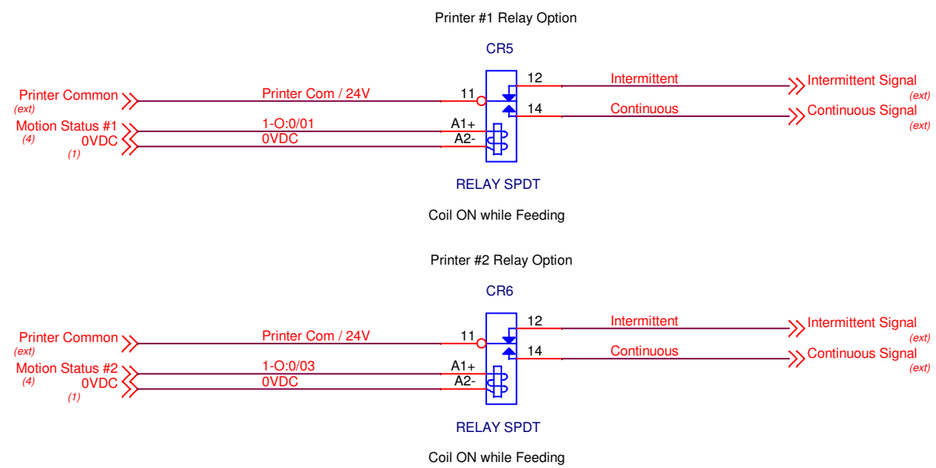


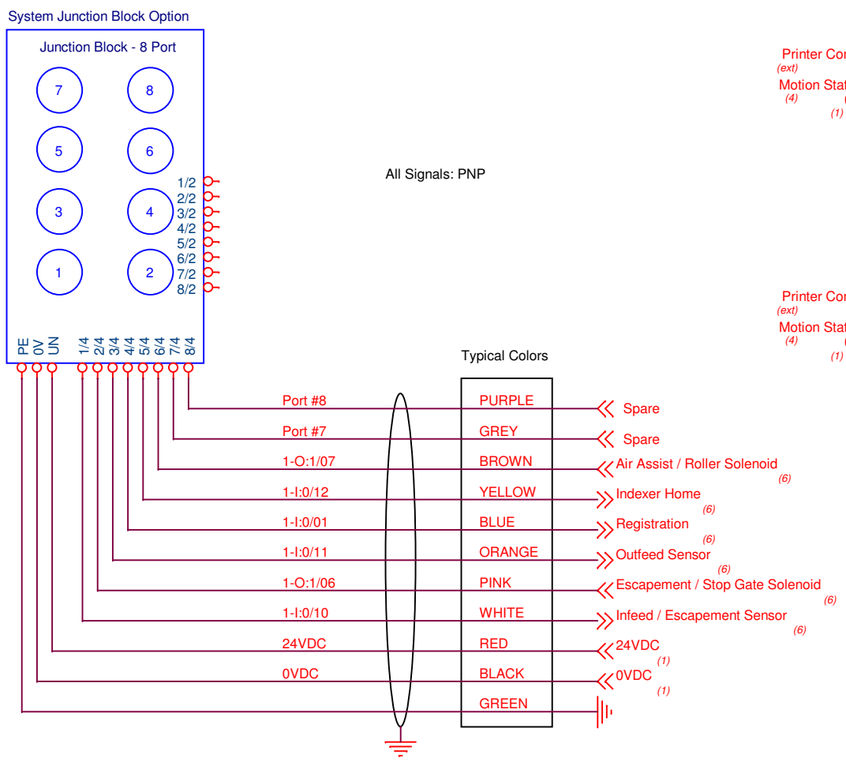


All Signals: PNP

| Printer | Com | Signal |
|---|---|---|
| Markem X40/X60 | BLACK | WHITE |
| Markem 8018 | X4-1 | X4-2 |
| Videojet 6330/6530 | RED | BLUE |
| Videojet 6230 | RED/WHITE | ORANGE |
| Allen | 23 | 22 |

| COLOR | TECHNICIAN | DATE |
|---|---|---|
| | | |
| | | |
| | | |

For Quadrel Assembly Use

QUADREL
LABELING SYSTEMS
7670 JENTHER DR.
MENTOR, OH
44060

| REV | DESCRIPTION | BY | DATE |
|---|---|---|---|
| D | Printer Relays | CAV | 27AUG2025 |
| C | Updated Shielding | CAV | 10FEB2025 |
| B | Hugger Options | CAV | 30JAN2025 |
| A | Release | CAV | 19NOV2024 |
| - | Pre Release | CAV | 03SEP2024 |

Drawn By: CAV

Title: SENSORS

Schematic # SB21820-006

Rev D

Date: Wednesday, August 27, 2025

Sheet 07 of 07

# 9 MAINTENANCE

## 9.1 GENERAL INFORMATION

This labeler has been designed with the minimal maintenance requirement possible. There are however some things to take into consideration.

The system is built to perform in humid conditions, but must not be pressure washed. In case of wash down conditions, it is recommended to cover each labeling head with a plastic tarp.

For the overall cleaning, it is recommended to use compressed air and clean, damp wipes.

Always turn off the system before proceeding with cleaning and maintenance.

The following section explains the preventive maintenance for each section

After every 100 hours of operation, a visual inspection of the system should be done and where it is necessary, lubricate and cleaning should be performed.

⚠ CAUTION WEAR PROTECTIVE EYEWEAR when performing any maintenance on this equipment.

⚠ CAUTION To reduce risk of fire, electrocution or other personal Injury when operating or maintaning the labeling head, follow basic safety precaution, including the following:

DO NOT perform any servicing or maintenance with the power ON.

Always disconnect the electrical plug from the wall socket

Make sure that the power is OFF or that the available E-stop buttons have been activated.

# LABELING SYSTEM

**This labeling system is reliable, versatile and durable. It will operate for years with very light maintenance if it is performed regularly. Most of the maintenance takes only a few minutes and substantially increases the operational life of the system and maintains label placement accuracy.**
**<u>Not all sections may apply to your equipment.</u>**

| | |
|---|---|
| **Daily:** | **D** |
| **Weekly:** | **W** |
| **Monthly** | **M** |
| **Quarterly** | **Q** |
| **Semi-Annually** | **S** |

**ASSEMBLY TITLE: LABELING HEAD ASSEMBLY**

**D-** Remove glue residue and labels from all rollers and idler. DO NOT use a knife or other tool to scrape the rollers. Adhesive Remover such as Goo-Gone or 3M Adhesive Remover is recommended. DO NOT use an adhesive remover that reacts with plastics or sensor lenses will be damaged.

**M-** Check for loose idlers and components and tighten as needed.

**S** – Lubricate all idler rollers shafts using 80w-90w gear lube on the white bearings where they contact the axle.

**ASSEMBLY TITLE: UNWIND ASSEMBLY**

**S-** Check and adjust dancer spring. If final spring tension is too soft then replace.

**S-** Check and inspect band brake. Replace if torn

**ASSEMBLY TITLE: REWIND ASSEMBLY**

**S-** Check and inspect friction disc (if applicable), Replace when worn out.

**S-** Check Kinetrol (if applicable) for leaks, Replace if necessary.

**ASSEMBLY TITLE: BRAKE BRUSH ASSEMBLY**

**S-** Reverse brake brush direction

**S-** Inspect Brake brush when brush body contour no longer viable or bristles are worn down. Replace

**ASSEMBLY TITLE: SLOT SENSOR ASSEMBLY**

**D-** Keep the sensor optical area clean from label and glue residue

**ASSEMBLY TITLE: SIDE PLATE ASSEMBLY**

**S-** Lubricate all idler rollers shafts using 80w-90w gear lube on the white bearings where they contact the axle.

**ASSEMBLY TITLE: PEEL PLATE ASSEMBLY**

**D-** Clean all the parts that may acquire labels or glue residue. DO NOT use a knife or other tool to scrape the rollers. Adhesive removers are recommended.

**W-** Inspect Teflon tape on peel plate tip. Replace if the steel is exposed.

**S** – Lubricate all idler rollers shafts 80w-90w gear lube

**ASSEMBLY TITLE: DRIVE AND PINCH ROLL ASSEMBLY**

**D-** Remove glue residue and labels from drive roller. DO NOT use a knife or other tool to scrape the rollers. Isopropyl alcohol and adhesive removers are recommended.

**W-** Clean the knurled roll with a soft brass brush and adhesive remover.

**M-** Check and inspect drive roll. No play should be present when powered up. If there is a groove the width of the label liner, replace the worn roller.

**M** – Lubricate knurled roll shafts using 80w-90w gear lube.

**S-** Inspect and Lubricate, springs and slugs.

**ASSEMBLY TITLE: ROLLER/BRUSH IMPRESSER**

**D-** Check the rollers/brushes. They should be free of label flash, glue and debris. This will prevent jamming and web tears.

**W-** Check the foam rollers. If foam wear is noticeable, replace as necessary.

***NOTE:*** Exercise caution when removing bad labels from foam. Careless removal can result in torn foam which may leave the labeler inoperable until the roller is replaced!

**ASSEMBLY TITLE: OPERATOR PANEL**

-No maintenance is required for the operator panel

-Occasionally, the keypad may be cleaned with any non-solvent based cleaning solution. Glass cleaner on a clean towel then wipe the membrane.

**ASSEMBLY TITLE: ELECTRICAL**

**W-** Check the foam filter for the fan. Clean or replace.

**ASSEMBLY TITLE: CONVEYOR**

**D –** Inspect conveyor chain for broken flights of table top chain

**W –** Inspect conveyor for labels / adhesive and remove as needed

**S –** Check gearbox oil levels and add as needed.
American Lubricants SHC-90W oil.

**ASSEMBLY TITLE: FEEDSCREW**

**W –** Remove glue residue and labels from feed screws

**W** – Lubricate internal feedscrew drive assembly, with muti-purpose grease.

**S –** Lubricate grease fittings / chains / bearings with quality muti-purpose grease – as needed

**ASSEMBLY TITLE: VERTICAL ROLLER**

**W** – Remove labels from rollers with adhesive remover / cleaner

**W –** Lubricate chains with food grade grease.

**ASSEMBLY TITLE: EJECT STATION**

**D** – Clean all parts that have acquired label or glue residue

**ASSEMBLY TITLE: INFEED / OUTFEED BANK SENSOR**

**W** – Clean and glue residue or labels off sensor and/or reflectors

**ASSEMBLY TITLE: SLEEVER**

**M** – Drive rollers – Inspect for wear and clean with a citrus based adhesive removal

**M** – Inspect tension belts for cutter blade and cutter assembly for wear. Replace as needed.

**M** – Inspect cutter blades and bearings for wear. Replace as needed

**M** – Inspect perforation blades / bearings for wear and free of debris. Replace as needed.

**S-** Check, inspect, and grease all lead screws (threaded rods)

**S** – Inspect mandrel and bearings for wear. Ensure they spin freely Replace as needed.

**NOTES:**

GENERAL PURPOSE FEEDSCREW LUBRICATION GUIDE

During your weekly maintenance of your Quadrel Labeling Systems equipment follow the steps below to ensure proper lubrication of the internal drive system for your feedscrew assembly.

Step 1 – Your dual feedscrews are connected inside the conveyor with a spline shaft assembly. First remove the chain so you have easy access to the this.

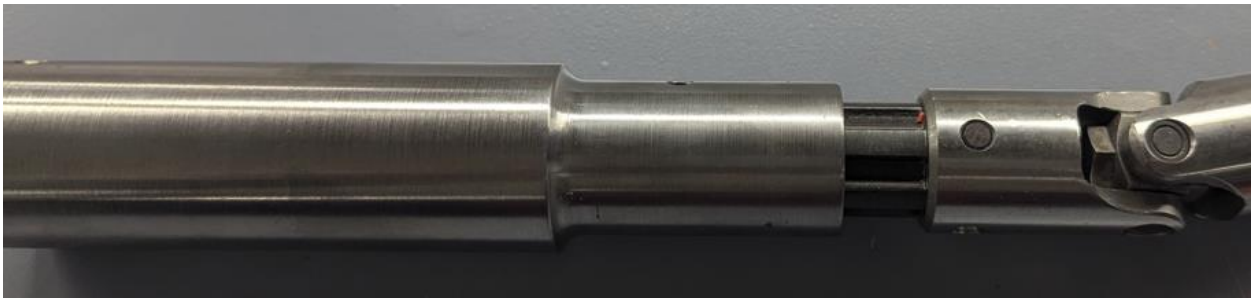

Step 2 – Open your feedscrews to your largest product. This will expose the spline assembly shaft that you will be applying the muti-purpose grease to.

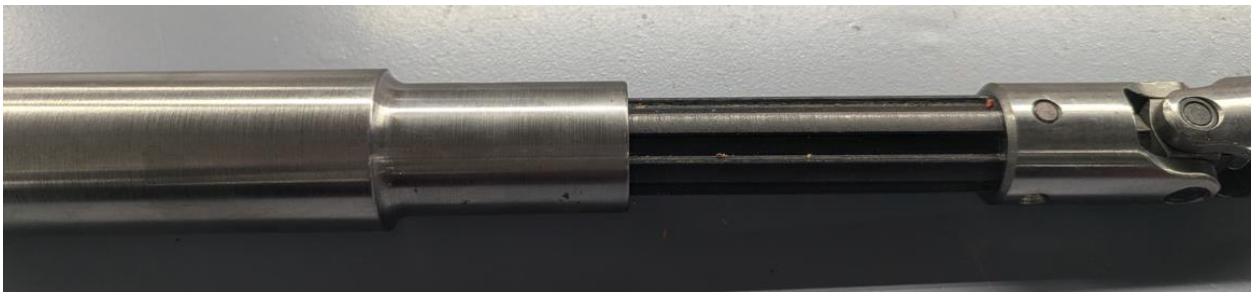

Step 3 – Apply muti-purpose grease to the now exposed spline shaft assembly.  Ensure to apply multi-purpose grease all the way around the spline shaft– Top, bottom and sides

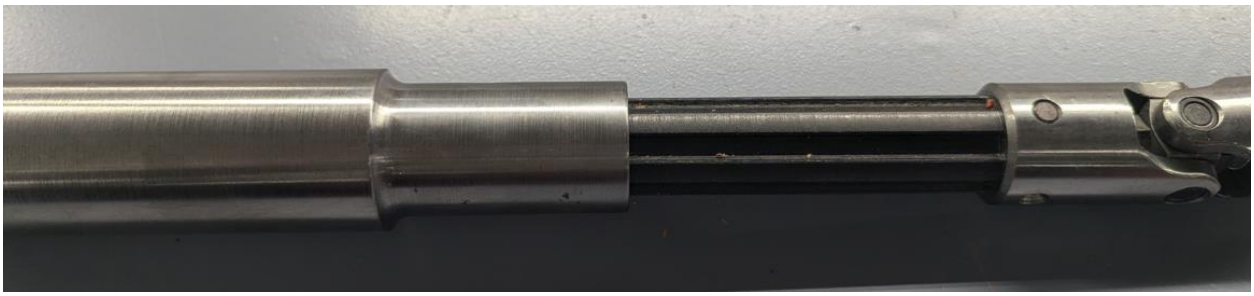

Step 4 – Slowly move the feedscrews in and out to so the grease can spread evenly over the length of entire spline shaft assembly.

Step 5 – Reconnect conveyor chain

**Setup procedure for Powered rewind using MGC403-11-00MD drive**

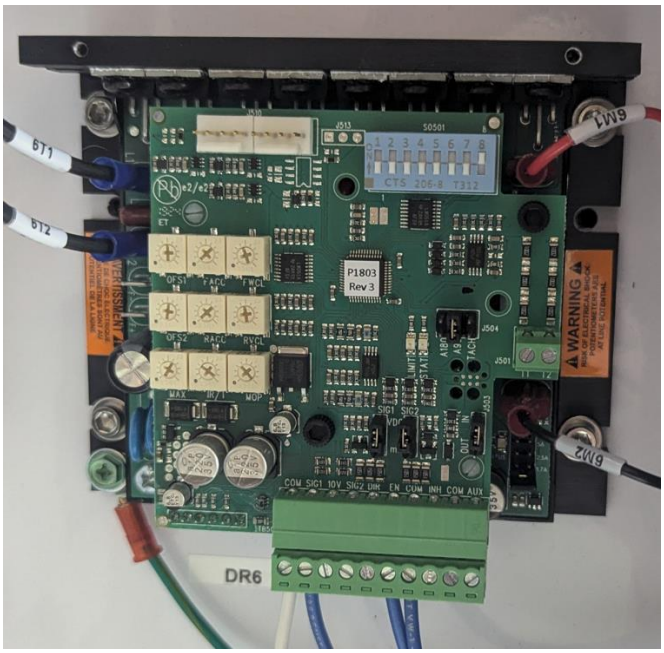


**Upon receiving drive set the following BEFORE installing in the machine.**

1. Dip switches - set all switches to the off position. This is the Light blue row of switches shown in the image below
   a. 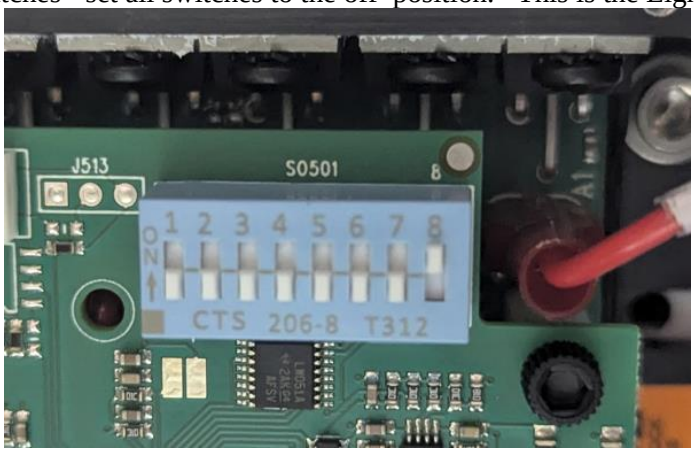

2. Set Jumpers on drive based on electrical schematic for your machine
   a. SIG1 – VDC
   b. SIG2 – VDC
   c. J504 – A90
   d. AMP CURRENT – 1.7A – This located near the 10 pin green connector that
      i. 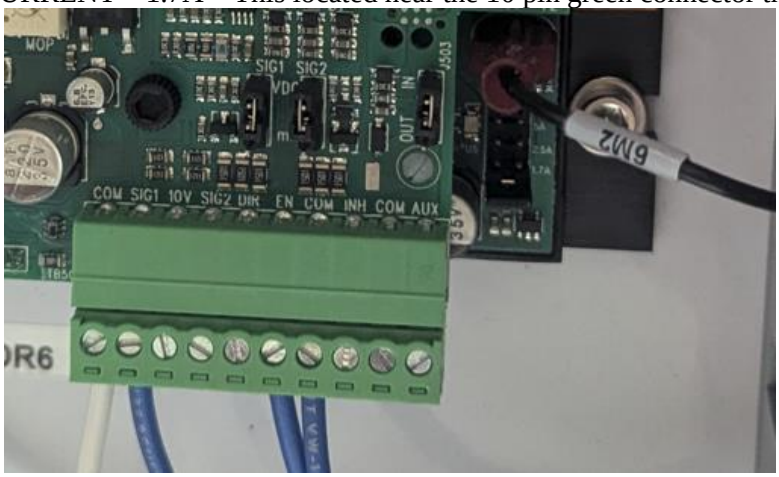

3. Using a small flat blade / Slot screwdriver adjust the following pots as indicated in the image below:
   a. 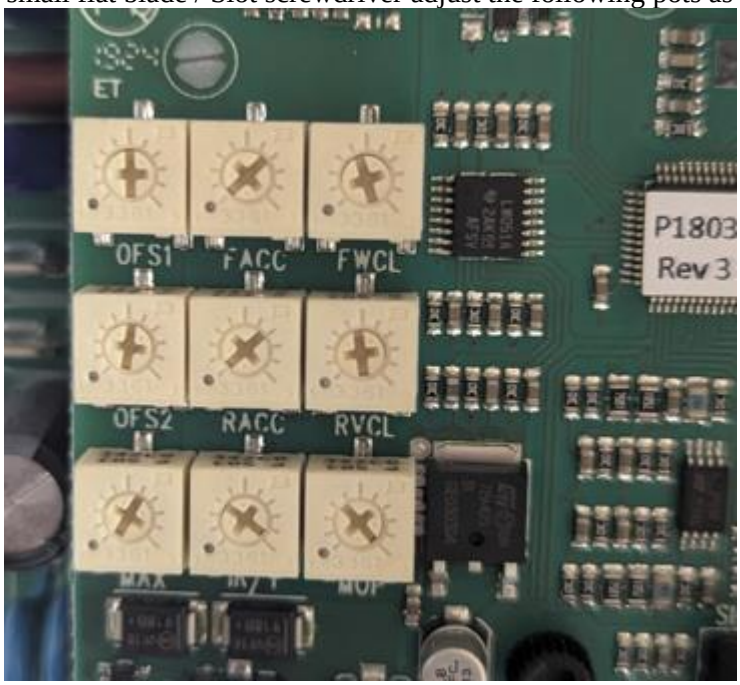

      i. Top row **OFS1** – WILL BE ADJUSTED AT LATER STEP
      ii. Top row – **FACC -** turn counter clockwise until it stops.
      iii. Top row **FWCL** – set to half way point – midpoint
      iv. Middle row **- OFS2** – turn counter clockwise until it stops. This turns the pot OFF
      v. Middle row – **RACC -** turn counter clockwise until it stops
      vi. Middle row – **RVCL** – set to half way point – midpoint
      vii. Bottom row – **MAX** – Set to 3/4 point
      viii. Bottom row **– Leave other 2 pots at factory setting – DO NOT ADJUST**
4. **Install drive in machine then proceed to next steps**
5. Set the Cam on the rewind dancer per image below when the dancer arm is at rest. Rest is when the arm is all the way back against the rubber bumper as shown

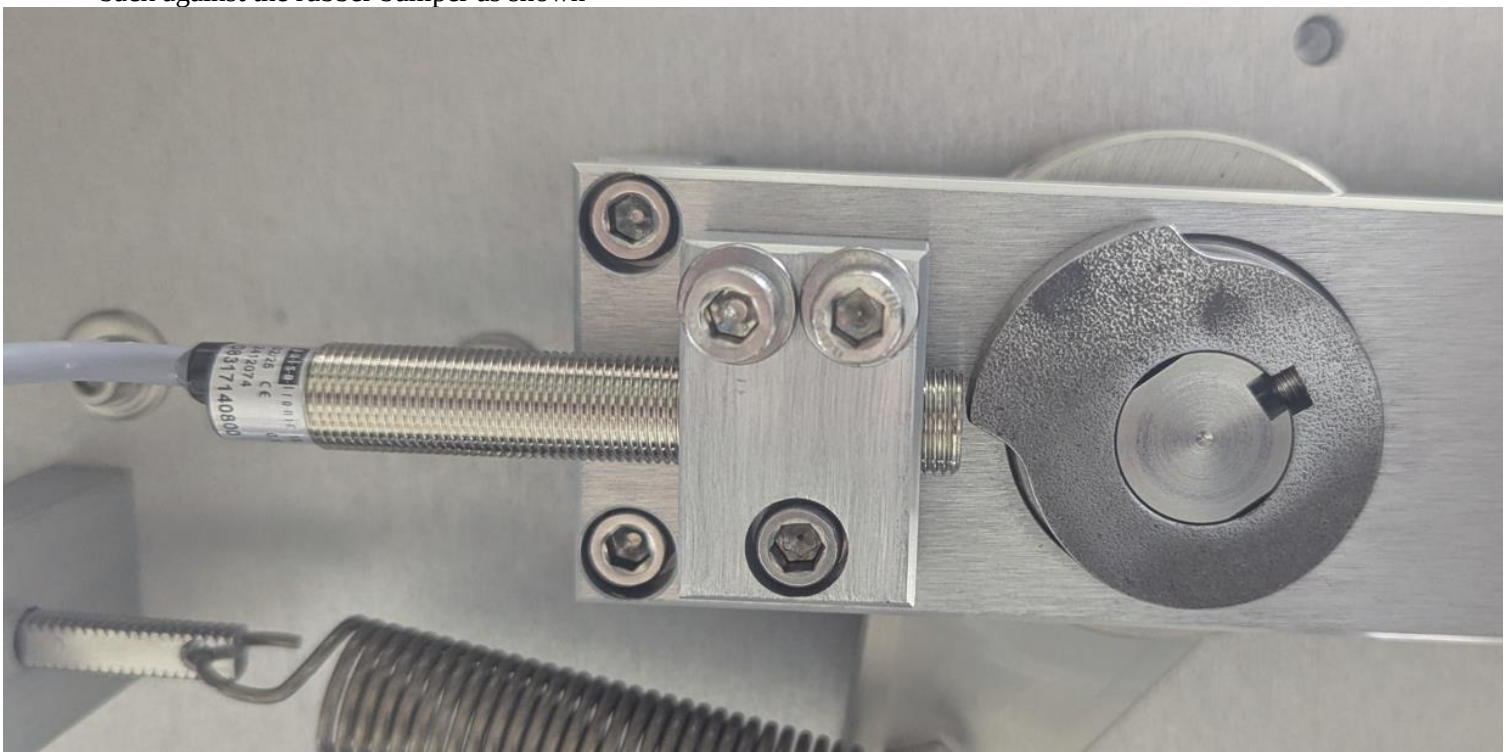

6. On the HMI go to into labeling head service menu. You will be looking at the REWIND PROX VOLTAGE (example below)

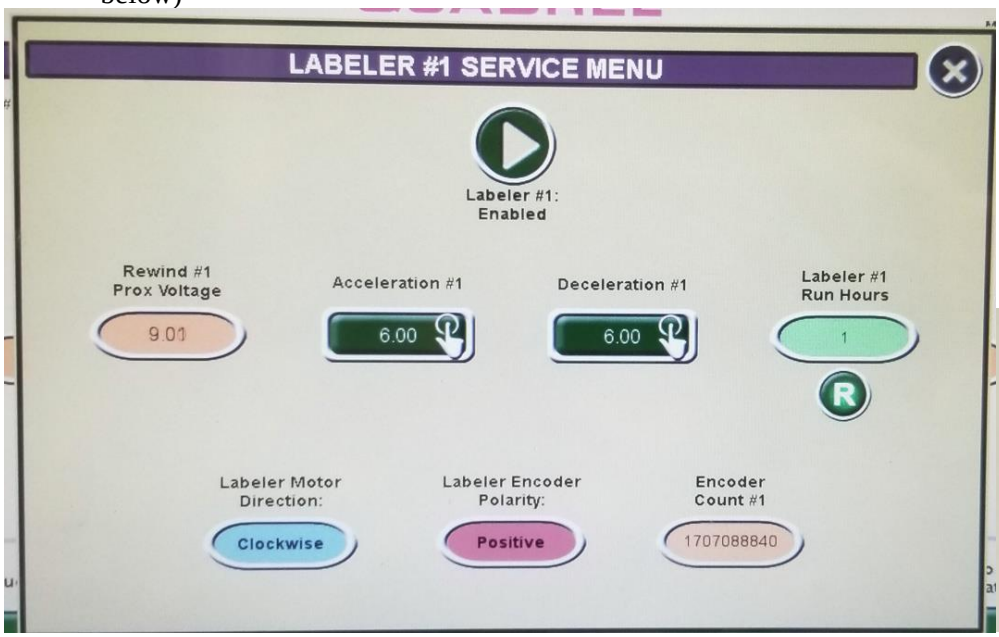


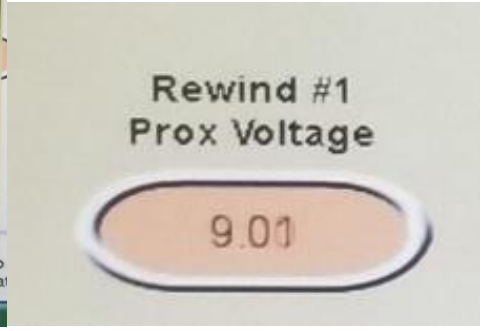


7. Adjust the sensor gap at the cam by loosening the bolt using an allen key so that the sensor can be moved forward or backward. The bolt does NOT touch the sensor. Loosening it opens the clamp so you can adjust.
8. Set the gap so the REWIND PROX VOLTAGE on the HMI reads .**90 it must be under 1 volt.**
    a. **Retighten screw so the clamp sensor no longer moves**

b. 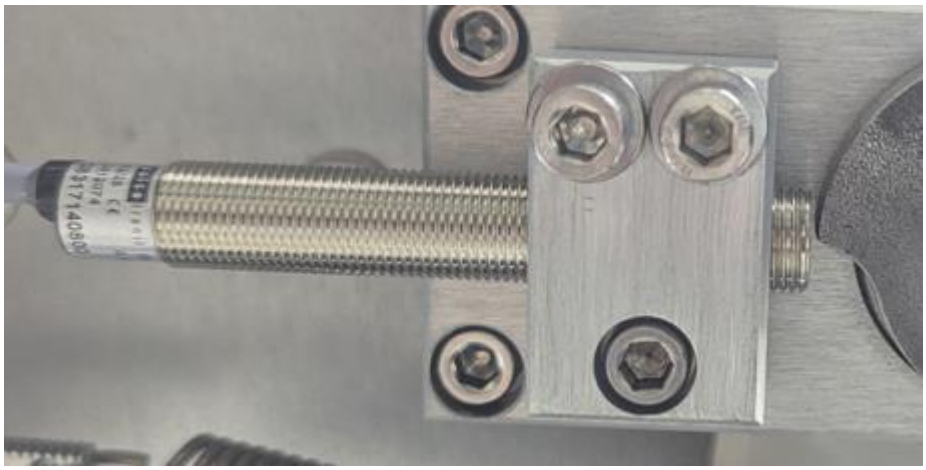

9. Test by moving the rewind dancer arm forward. When doing this you should see the rewind prox voltage on the HMI increase up to 9 volts

    a. **If you do not see the voltage increase steadily, recheck cam sensor gap in step 7**

10. Turn on rewind switch on the back of the labeler. This will engage / turn on the motor.
11. Move the rewind dancer arm forward the rewind hub should start to turn clockwise. It will slow then stop as you move forward. Rewind hub should ALWAYS be turning clockwise. If it moves counter clockwise move to **step 11a**
    a. While holding the arm in the position where it started to run counter clockwise, it MUST be running counter clockwise, you will adjust **OFS1** until the rewind hub stops moving.
        i. 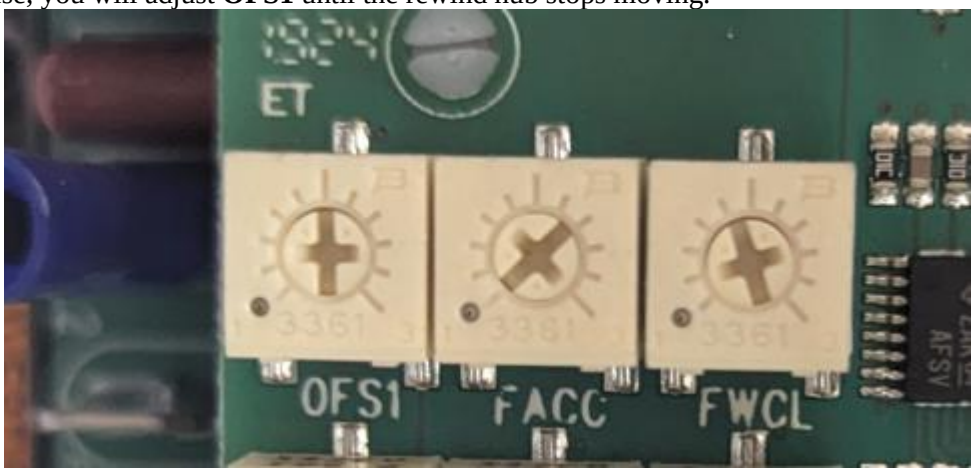

    b. This adjustment may need to be done multiple times until it no longer moves counter clockwise when rewind arm is all the forward and at rest.

## 9.2 BELTS

Monthly, a visual inspection of the rewind belt and timing belt, to do this depending on the labeling head you may need to remove the bottom cover on the head.

Refer to photos below.

Servo labeling head.

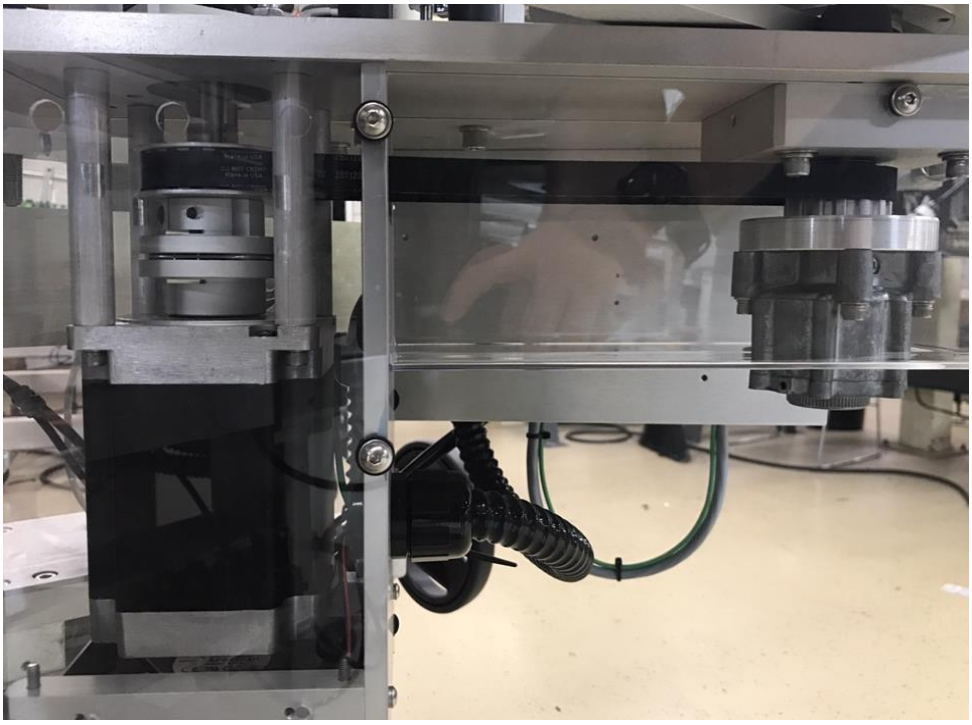

Stepping labeling head.

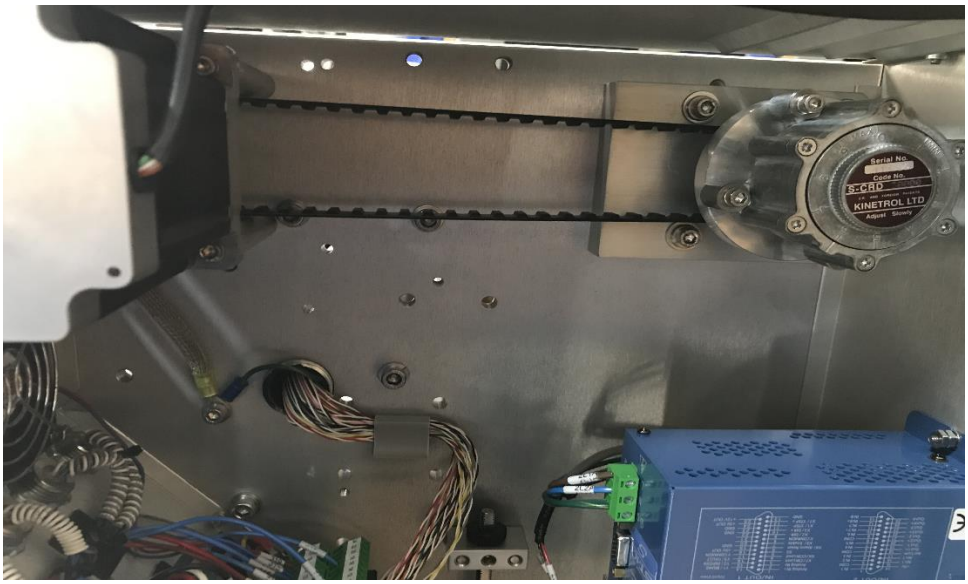


⚠ CAUTION DO NOT ATTEMPT doing this with the equipment under tension (with power on).

The visual inspection should consist of looking for cracks or defects in the belts. If this is the case, change the belts that are defective. Refer to the parts listing in the labeling head section of this manual.
The brake band mechanism requires a monthly visual inspection as well. Also once every 12 months you should consider replacing the belt (it is possible that you may need to change it later or earlier than 12 months depending the usage of the labeling head). The brake band belt assembly is located at the base of the unwind assembly. See images below for reference.

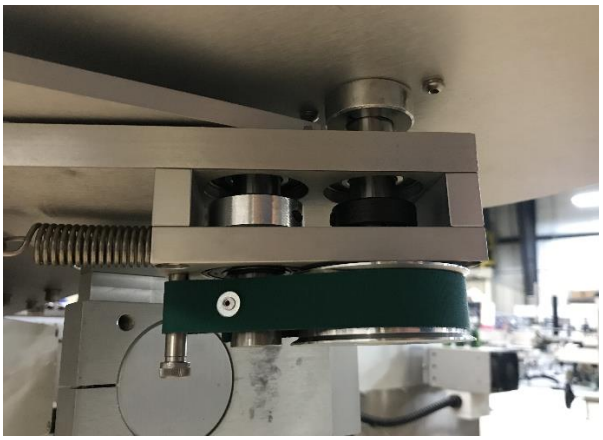

For replacement parts see the unwind assembly drawing for your labeling head in this manual.

## 9.3 ROLLERS

It is important that your labeler is as clean as possible in its environment in order for it to perform property. Daily, it is suggested to clean all the rollers including the drive roller (the rubber roller), the pressure shoe and peel plate using a damp cloth with alcohol. Make sure those parts have no glue or labels on it.

Weekly, spray a silicone base lubricant on each end of the plastic bearing.

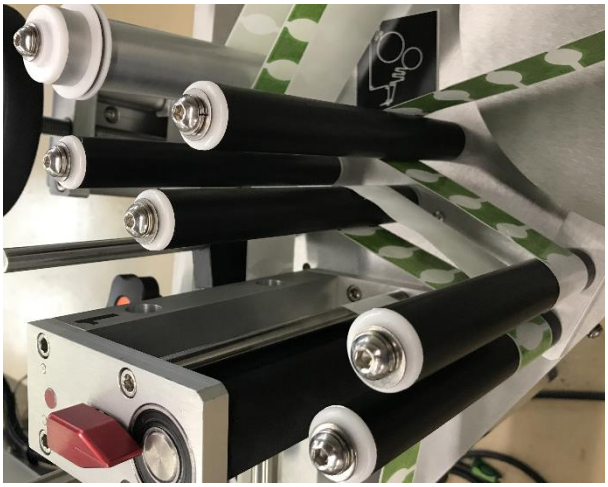

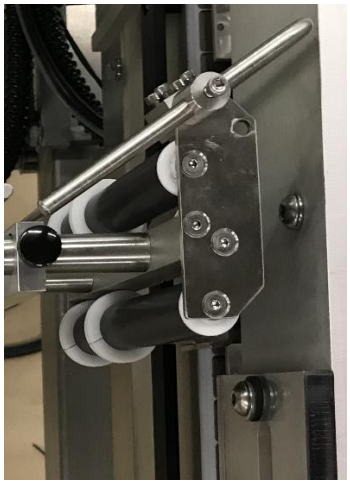

## 9.4 SENSORS

The sensors all have an electronic eye called a photocell; these must be free of lint or dirt. Since the photocells are generally made with glass or plastic lenses. They naturally attract substances which could easily trigger the sensor, use a cotton swap to gently clean the eye of the sensor as you would any lens, in a circular motion.

## 9.5 CONVEYOR

Always keep the belt or (chain) clean. To clean it simply use compressed air with an osha approved nozzle and/or damp wipes. If necessary, a soft cleaning agent can be used.

### 9.5.1 CLEANING

To clean the under carriage portion of the conveyor, simply remove the belt using an punch or similar tool and hammer to tap out the retaining belt link pin. (see images below, the chain has an oriention to the pins, you must tap it out from the narrow diameter) Clean the desired portion with a damp cloth and replace the pin to the belt. The pin will be tapped in the opposite side you tapped it out. *You can also lift the chain and wipe under it.

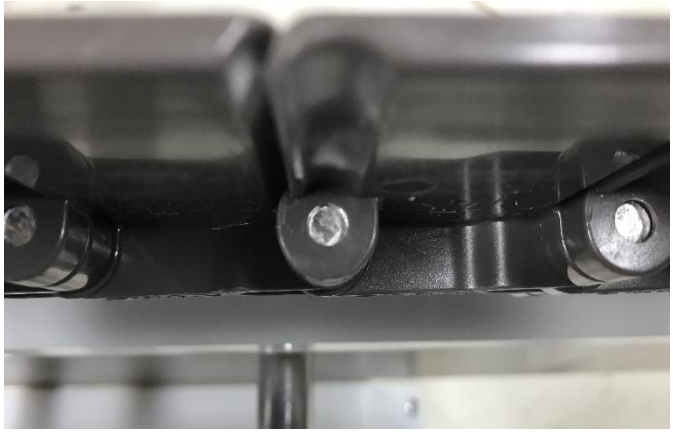

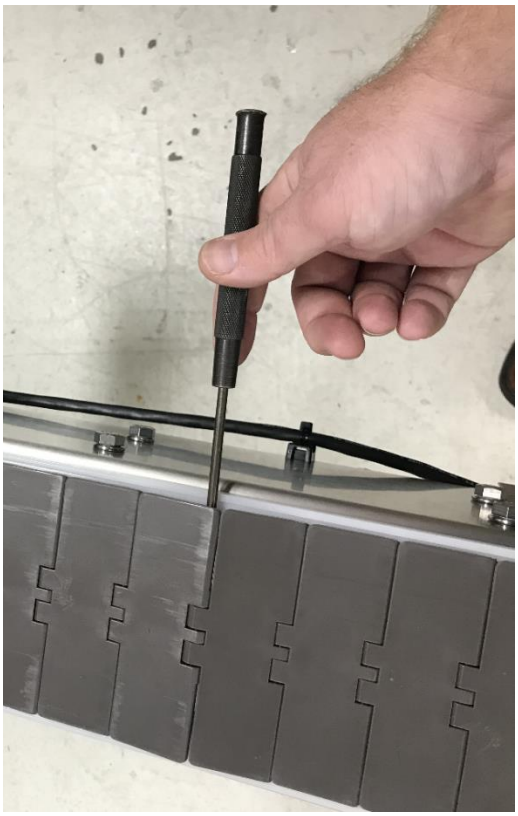

# 10 CLEARING A JAM

In the event a jam occurs on your Quadrel Labeler reference the following steps to clear.

1. Press the conveyor stop button or the emergency stop if you are unable to reach the stop button.
2. Clear the jam manually in the affected are of the equipment where jam is located
3. Once jam is cleared reenergize the estop, if pressed, and press the reset button (where applicable) to clear faults.
4. Put equipment back into “run” and press start to turn the system back online to continue labeling

# 11 WARRANTY

The standard warranty period for Quadrel equipment is 12 months following invoicing. The warranty covers all parts with consideration taken towards reasonable use and normal wear and tear. Not covered by warranty are parts that have a limited wear factor, any required labor by Quadrel. Prior to return to Quadrel, parts must be verified defective.

## Return of defective parts

To return a defective part, you will need to get an RMA number from Quadrel. All RMA’s are issued though our parts department. Please specify the serial number of the equiptment, the client’s name, address, phone number, contact name and the nature of the problem. To get a replacment part, a purchase order is required. You will be billed for the new part and credited for the defective part after return and evaluation. If the part is determined to be defective due to improper use, no credit will be issued.

## Appropriate Use of Equipment

The equipment supplied to the end user by Quadrel are to be used for the sole purpose for which they were intended and must follow Quadrel’s specifications on usage as well as appropriate functions. Quadrel will not assume any responsibility for any inappropriate use or modifications to the said equipment other than for the use it was initially built for.
The warranty will cease to apply forthwith, in Quadrel’s opinion, the equipment has been used abnormally or in an abusive manner, if it has not been properly maintained, if it has not been carried on a truck equipped with an air-ride suspension when required by Quadrel or if it has been used, or maintained contrary to the owners manual provided by Quadrel.

## Responsibility Limits

The solution put forth has been prepared with the information that has been provided to Quadrel by the end user. Subsequently, Quadrel cannot assume any responsibility for the exactitude, precision, and the validity of the information which was supplied. Moreover, Quadrel cannot be responsible for (a) any damages, direct or indirect, secondary, or

accessory, including without limitations, the loss of profit, workflow interruption, loss of production, loss of profits and other; (b) any and all damages claimed against the end user by a third party; (c) any or all damages caused to the property of end user or any other third party; (d) any or all resulting in an act from the end user or third party, major force, or act of god, unforeseen cause, or event.

With all reservation, in the eventuality where the responsibility is that of Quadrel relative to any defect of quality of said equipment or proposed solution Quadrel would be able to accept the responsibility, to its entire discretion, with the replacement of part of the said equipment or solution. By a compatible or identical equipment or solution or by a reimbursement of value agreed upon. In no case can Quadrel's responsibility exceed the total monetary sums received for the said defective equipment or solution.